安全如此重要!

只（止）在刹那间

Safety is so important ! to stop in an instant

工业制动与安全防风

INDUSTRIAL BRAKE AND SAFETY PRECAUTIONS

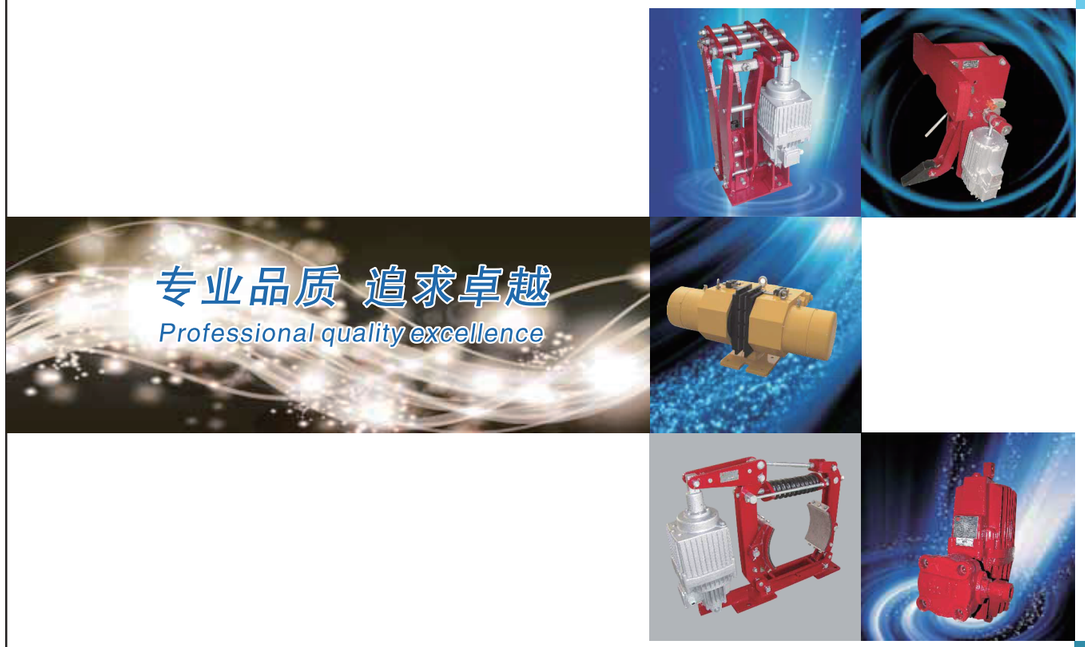

目 录 CONTENTS

目 录 CONTENTS

鼓式制动器 DRUM BRAKES

应用：鼓式制动器，广泛应用于各种起重运输、港口装卸、冶金设备、矿山机械及工程机械中各种机构的减速和停车（维持）制动。

Application:

Drum brakes, widely used in lifting transport, port handling , metallurgical equipment , mining machinery and engineering machinery deceleration and stopping of various institutions (maintain) the brake .

特殊要求

Special requirements

●根据用户要求，可生产各种常开、防爆及非标产品。

● *According to user requirements , can produce a variety of normally open , explosion–proof and non–standard products.*

一、电力液压鼓式制动器 *Electro–hydraulic drum brakes*


YWZ4系列series


YWZ4系列series


YWZ4(A)系列 series

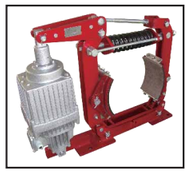
YWZ8系列 series

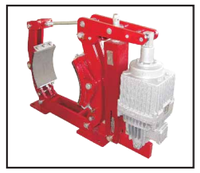
YWZ9系列 series

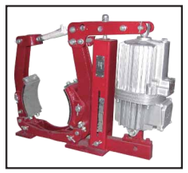
YW 系列 series

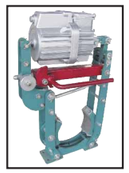
YW-L系列series

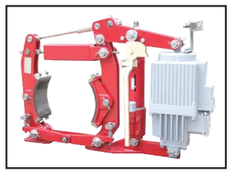
YW-E系列 series

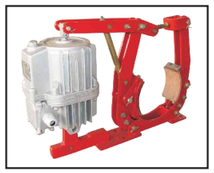
YW-K系列series

二、电磁鼓式制动器 *Electromagnetic drum brakes*

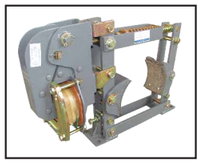
TJ2系列 series


JZ系列 series


MW(Z)系列series

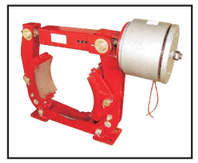
ZWZA、ZWZB系列series

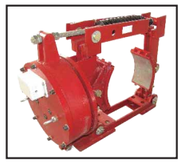
ZWZA、ZWZB系列series

三、其它系列 *Other series*

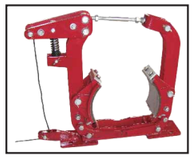
TWZ(B)系列series

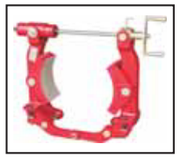
TYW系列series

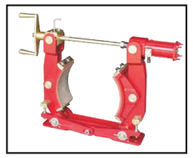
TYWZ2系列series


QW系列series

YWZ4系列
电力液压鼓式制动器

YWZ4 series electro–hydraulic drum brakes

符合标准

Sandards compliant

●YWZ4系列制动器连接尺寸和制动力矩参数符合JB/ZQ4388-86和GB6333-86(带A系列）标准，技术要求符合JB/T6406-2006标准；

● *The dimensions and braking torque parameters of YWZ4 series brakes comply with JB/ZQ4388-86 and GB6333–86 (with A–series) standard , technology requirements comply with JB/T6406-2006 standard.*

主要特点

Main Design Features

■根据用户需要制动衬垫安装形式有两种：铆接式和插入式(订货说明)。

■主要摆动铰点均设有自润滑轴承，传动效率高，在使用中无须润滑。

■*There are two methods for mounting of the brake linings upon request of the customer: Riveted type and inserted type (please specify when ordering).*

■*Main swinging articulation is equipped with the self-lubricating bearing, the transmission efficiency is high, in use without lubrication.*

订货标记

Order Mark

YWZ4–□ / □(A) –□–□ □

- 特殊要求(可用文字说明) *Special requirement (can be specified in words)*
  - F–防腐型 *Anti-Corrosion*
- 电源频率和电压等级(50Hz.380V时不标) *Power frequency and voltage(50Hz,380V unnecessary)*
- 制动力矩 *Brake torque*
- 产品型号 *Type*

订货示例

Order Example

YWZ4–300/45–630
YWZ4–300/45–415V
YWZ4–315/45A
YWZ4–300/E80–750
YWZ4–300/E80–750–60hz/440V
YWZ4–315/45A–415V

使用条件

Operating conditions

- 环境温度：-25~+40℃
- 相对湿度：≤90%
- 电源：三相交流50Hz(60)Hz
- 电压等级：380.400(440,460)V
- 周围工作环境中不得有易燃易爆及腐蚀气体。
  有特殊要求，在订货时协商确定

- *Ambient temperature:-25~+40℃.*
- *Relative humidity:≤90%*
- *Power:AC 3 phase 50Hz(60)Hz.*
- *Voltages:380.400(440.460)V.*
- *Around the workplace shall not commit any flammable, explosive and corrosive gases.*
  Special requirements can be discussed in order.

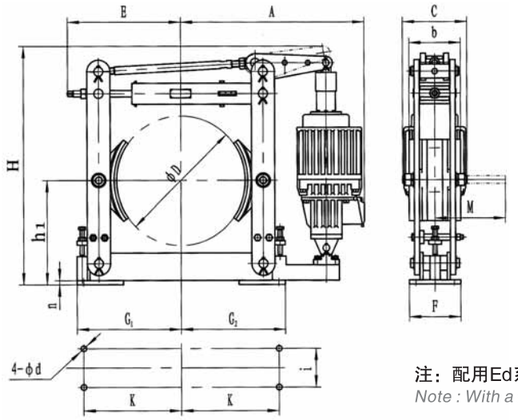

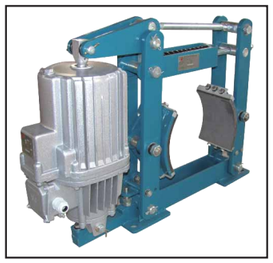

YWZ4系列 series

注：配用Ed系列推动器
Note : With a series of thrusters with Ed

YWZ4系列鼓式制动器技术参数及安装尺寸 *Technical date and dinensions*

制动器型号 *Brake type*	推动器型号 *Thruster type*	制动力矩 *Braking torque (Nm)*	安装及外形尺寸 *Dimensions (mm)*															重量 *Weight (kg)*
			A	b	C	D	d	E	F	G1	G2	H	h1	i	k	M	n	
YWZ4-100/E23	ED-23/5	40	320	70	160	100	13	130	75	125	125	375	100	40	110	144	6	21
YWZ4-150/E23	ED-23/5	100	350	90	160	150	17	175	100	170	170	430	140	60	150	144	8	25
YWZ4-150/E30	ED-30/5	120										462						29
YWZ4-200/E23	ED-23/5	200	430	90	160	200	17	210	100	195	195	430	170	60	175	156	8	31
YWZ4-200/E30	ED-30/5	230										463						34
YWZ4-200/E40	ED-40/4	270										460						35
YWZ4-300/E30	ED-30/5	320	490	140	160	300	22	290	130	280	280	595	240	80	250	213	10	65
YWZ4-300/E40	ED-40/4	400																66
YWZ4-300/E50	ED-50/6	630	527		195													78
YWZ4-300/E70	ED-70/5	700																79
YWZ4-300/E80	ED-80/6	750																79
YWZ4-400/E50	ED-50/6	1000	662	180	220	400	22	370	180	360	360	750	320	130	325	275	12	128
YWZ4-400/E70	ED-70/5	1100																140
YWZ4-400/E80	ED-80/6	1600																140
YWZ4-400/E100	ED-100/6	1750																145
YWZ4-400/E121	ED-121/6	2000	653		240							764						155
YWZ4-500/E121	ED-121/6	2500	713	200	250	500	22	440	200	415	415	925	400	150	380	310	15	210
YWZ4-500/E201	ED-201/6	3600																
YWZ4-600/E121	ED-121/6	3200	848	240	315	600	26	555	220	505	520	1100	475	170	475	400	18	390
YWZ4-600/E201	ED-201/6	5000																
YWZ4-700/E201	ED-201/6	8000	978	280	390	700	34	600	270	580	600	1245	550	200	540	495	25	465
YWZ4-700/E301	ED-301/12	8650																466
YWZ4-800/E301	ED-301/12	12500	1155	320	436	800	34	680	320	677	677	1417	600	240	620	556	25	885

注：具体型号、结构外形的尺寸保留更改的权利。
Note:Our company reserves the rights to change the actual type and overall dimensions of the structure.

使用条件

Operating conditions

- 环境温度：-25~+40℃
- 相对湿度：≤90%
- 电源：三相交流50Hz(60)Hz
- 电压等级：380.400(440,460)V
- 周围工作环境中不得有易燃易爆及腐蚀气体。
  有特殊要求，在订货时协商确定

- *Ambient temperature:-25~+40℃.*
- *Relative humidity:≤90%*
- *Power:AC 3 phase 50Hz(60)Hz.*
- *Voltages:380.400(440.460)V.*
- *Around the workplace shall not commit any flammable, explosive and corrosive gases.*
  Special requirements can be discussed in order.

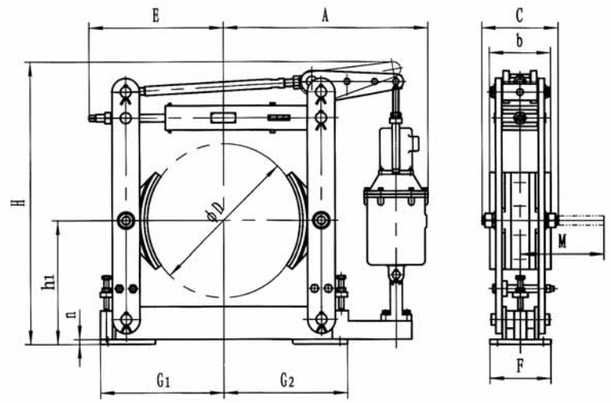

YWZ4系列 series

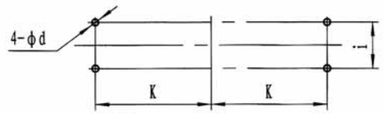

注：配用YT1系列推动器
Note : with a series of thrusters with Yt1

YWZ4系列鼓式制动器技术参数及安装尺寸 *Technical date and dinensions*

制动器型号 *Brake type*	推动器型号 *Thruster type*	制动力矩 *Braking torque (Nm)*	安装及外形尺寸 *Dimensions (mm)*															重量 *Weight (kg)*
			A	b	C	D	d	E	F	G1	G2	H	h1	i	k	M	n	
YWZ4-100/18	YT1-18ZB/2	40	269	70	137	100	13	125	75	125	125	384	100	40	110	138	6	20
YWZ4-150/25	YT1-25ZB/4	100	307	90	154	150	17	173	100	170	170	437	140	60	150	138	8	26
YWZ4-200/25	YT1-25ZB/4	200	347	90	154	200	17	210	100	195	195	440	170	60	175	156	8	30
YWZ4-300/25	YT1-25ZB/4	320	447	140	160	300	22	281	130	280	280	592	240	80	250	200	10	63
YWZ4-300/45	YT1-45Z/6	630	459	140	178	300	22	281	130	280	280	600	240	80	250	200	10	70
YWZ4-400/45	YT1-45Z/6	1000	564	180	220	400	22	370	180	360	360	735	320	130	325	265	12	120
YWZ4-400/90	YT1-90Z/8	1600	580	180	220	400	22	370	180	360	360	740	320	130	325	265	12	130
YWZ4-400/125	YT1-125Z/10	2200	632	180	254	400	22	370	180	360	360	850	320	130	325	271	12	167
YWZ4-500/90	YT1-90Z/8	2500	670	200	250	500	22	440	200	415	415	890	400	150	380	310	16	210
YWZ4-500/125	YT1-125Z/10	2650	692	200	254	500	22	440	200	415	415	940	400	150	380	310	16	220
YWZ4-500/180	YT1-180Z/12	3000	692	200	254	500	22	440	200	415	415	940	400	150	380	310	16	235
YWZ4-600/90	YT1-90Z/8	3200	805	240	315	600	26	555	220	505	520	1082	475	170	475	390	18	400
YWZ4-600/180	YT1-180Z/12	5000	827	240	315	600	26	555	220	505	520	1082	475	170	475	390	18	430
YWZ4-700/180	YT1-180Z/12	8000	957	280	390	700	34	705	270	580	600	1225	550	200	540	495	25	500
YWZ4-800/180	YT1-180Z/12	10000	1094	320	436	800	34	772	320	677	697	1417	600	240	620	556	25	720
YWZ4-800/320	YT1-320Z/12	12500	1155	320	436	800	34	772	320	677	697	1417	600	240	620	556	25	885

注：具体型号、结构外形的尺寸保留更改的权利。
Note:Our company reserves the rights to change the actual type and overall dimensions of the structure.

使用条件
Operating conditions

- 环境温度：-25~+40℃
- 相对湿度：≤90%
- 电源：三相交流50Hz(60)Hz
- 电压等级：380.400(440,460)V
- 周围工作环境中不得有易燃易爆及腐蚀气体。有特殊要求，在订货时协商确定

- *Ambient temperature:-25~+40℃.*
- *Relative humidity:≤90%*
- *Power:AC 3 phase 50Hz(60)Hz.*
- *Voltages:380.400(440.460)V.*
- *Around the workplace shall not commit any flammable, explosive and corrosive gases. Special requirements can be discussed in order.*

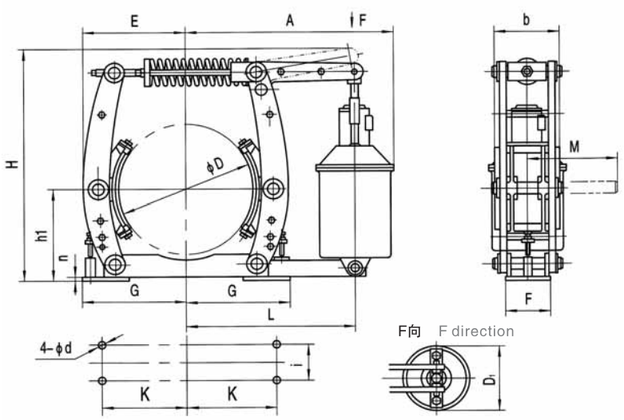

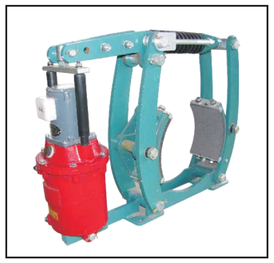

YWZ4系列 series

YWZ4(A)系列鼓式制动器技术参数及安装尺寸 *Technical date and dinensions*

制动器型号 *Brake type*	推动器型号 *Thruster type*	制动力矩 *Braking torque (Nm)*	安装及外形尺寸 *Dimensions (mm)*																重量 *Weight (kg)*
			A	D1	b	L	D	d	E	F	G1	G2	H	h1	i	k	M	n	
YWZ4-160/18A	YT1-18ZB/2	80-140	345	137	65	275	160	14	157	90	155	155	370	132	55	130	145	6	25
YWZ4-160/25A	YT1-25ZB/4	112-180	354	154									418						37
YWZ4-200/18A	YT1-18ZB/2	100-125	346	137	80	277	200	14	190	90	180	180	405	160	55	145	145	8	28
YWZ4-200/25A	YT1-25ZB/4	112-225	379	154									445						43
YWZ4-250/25A	YT1-25ZB/4	140-225	408	154	100	331	250	18	220	100	205	205	480	190	65	180	190	10	58
YWZ4-250/45A	YT1-45Z/6	250-400	420	178									571						70
YWZ4-315/25A	YT1-25Z/4	180-280	440	154	125	433	315	18	247	110	245	275	545	225	80	220	220	10	74
YWZ4-315/45A	YT1-45Z/6	315-630	522	178									570						78
YWZ4-315/90A	YT1-90Z/8	630-1250	538	210									699						147
YWZ4-400/45A	YT1-45Z/6	400-630	594	178	160	505	400	22	304	140	310	310	675	280	100	270	275	12	125
YWZ4-400/90A	YT1-90Z/8	800-1250	610	210									715						140
YWZ4-400/125A	YT1-125Z/10	1120-1800	632	254									855						167
YWZ4-500/90A	YT1-90Z/8	1000-1600	697	210	200	592	500	22	368	180	365	365	790	335	130	325	330	16	202
YWZ4-500/125A	YT1-125Z/10	1400-2250	719	254									860						220
YWZ4-500/180A	YT1-180Z/12	2000-3150	719	254									940						237
YWZ4-630/125A	YT1-125Z/10	1800-2800	814	254	250	703	630	27	478	220	450	450	1015	425	170	400	400	20	335
YWZ4-630/180A	YT1-180Z/12	2500-4000	814	254									1035						358
YWZ4-630/320A	YT1-320Z/12	4800-7100	875	375									1090						425
YWZ4-710/180A	YT1-180Z/12	3100-4500	985	254	280	855	710	27	520	240	500	550	1130	475	190	450	452	20	475
YWZ4-710/320A	YT1-320Z/12	5000-8000	1046	375															506
YWZ4-800/320A	YT1-320Z/12	8000-12000	1170	375	320	1012	800	27	595	280	570	750	1290	530	210	520	510	30	716

注：YWZ4(A)系列制动器替代原YWZ3B。具体型号、结构外形的尺寸保留更改的权利。
Note:YWZ4 (A) Series brake instead of the original YWZ3B.Our company reserves the rights to change the actual type and overall dimensions of the structure.

YWZ8系列电力液压鼓式制动器
YWZ8 series electro-hydraulic drum brakes

符合标准
Sandards compliant

■YWZ8系列制动器连接尺寸和制动力矩参数符合JB/ZQ4388-86和GB6333-86(带A系列)标准，技术要求符合JB/T6406-2006标准，YWZ8系列配套符合DIN15430标准的Ed系列推动器；

■ *The dimensions and braking torque parameters of YWZ8 series brakes comply with JB/ZQ4388-86 GB6333-86 (with A-series) standard, technology requirements comply with JB/T6406-2006 standard. YWZ8 series brakes are equipped with Ed series thrusters which comply with DIN15430 standard.*

主要特点
Main Design Features

■联锁式退距均等装置和瓦块自动随位装置，可始终保持两侧瓦块退距均等且无需调整，完全避免因退距不均使一侧制动衬垫浮贴制动轮的现象。

■主要摆动铰点均设有自润滑轴承，传动效率高，寿命长，在使用过程中无需润滑。

■制动衬垫为卡装式整体成型结构，更换十分方便、快捷，备有半金属(无石棉)硬质和半硬质，软质(含石棉、无石棉)等不同材质的制动衬垫供用户选择。

■全部采用本公司新型推动器配套，动作灵敏，寿命长。

■*Interlocking shoe clearance balancing device and shoe auto-aligning device constantly equalize the clearance of brake shes on both sides and make adjustment unnecessary, completely avoiding brake lining one side sticking to brake wheel.*
■ *At main hinge points are equitpped with self-lubricating bearings, which make higher efficiency of transmission and longer performance life, and lubricating is unnecessary during the course of operation.*
■ *Brake spring is arranged inside square tube and surveyor's rod is placed on one side. It is easy for customers to read braking torque value and avoid the troubles of measuring and computing.*
■ *Brake lining is of card whole piece shaping structure, which is easy and quick to replace. Brake lining of various-materials such as half-metal (non-asbestos) hard and haft-hard, soft (include asbestos) substance are available forcustomer to choose.*
■ *Our company's new types of thrusters are adopted, which work acutely and have long life.*

附加装置
Options

- 手动释放装置
- 释放(开闸)或闭合(闭闸)限位开关，可实现制动器是否正常释放或闭合的信号显示。
- 采用带下降延时阀的推动器驱动，可实现制动器的延时闭合。

- *Hand release lever.*
- *Open(Release) or close limit-switch, which indicates whether the brake is properly released or closed.*
- *Adopt thruster with fall delay valve as drive system which can realize closing delay of brake.*

使用条件
Operating conditions

- 环境温度：-25~+40℃
- 相对湿度：≤90%
- 电源：三相交流50Hz(60)Hz
- 电压等级：380.400(440,460)V
- 周围工作环境中不得有易燃易爆及腐蚀气体。有特殊要求，在订货时协商确定

- *Ambient temperature:-25~+40℃.*
- *Relative humidity:≤90%*
- *Power:AC 3 phase 50Hz(60)Hz.*
- *Voltages:380.400(440.460)V.*
- *Around the workplace shall not commit any flammable, explosive and corrosive gases. Special requirements can be discussed in order.*

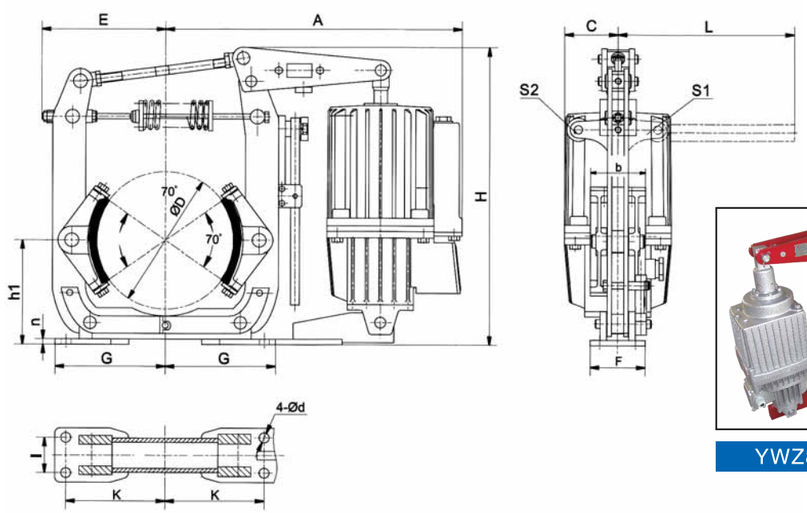

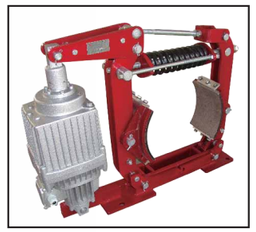

YWZ8系列 series

订货标记
Order Mark

YWZ8-□/□(A)-□-□□□

- 特殊要求(可用文字说明) *Special requirement (can be specified in words)* — F-防腐型 *Anti-Corrosion*
- 电源频率和电压等级(50Hz.380V时不标) *Power frequency and voltage(50Hz,380V unnecessary)*
- 附加装置 *Additional option* — K1-开闸限位开关 *Release limit-switch*; S1-手动释放装置（左侧布置） *Hand release lever(left)*; S2-手动释放装置（右侧布置） *Hand release lever(right)*
- 制动力矩或代号 *Brake torque or code*
- 产品型号 *Type*

订货示例
Order Example

YWZ8-300/E50　　YWZ8-300/50A-RL60Hz,440V.F

YWZ8系列鼓式制动器技术参数及安装尺寸 *Technical date and dinensions of YWZ8 series drum beakes*

制动器型号 *Brake type*	推动器型号 *Thruster type*	制动力矩 *Braking torque (Nm)*	安装及外形尺寸 *Dimensions (mm)*														重量 *Weight (kg)*
			D	h1	k	i	d	n	b	F	G	E	H	A	L	C	
YWZ8-200/E23	ED23/5	135-200	200	170	175	60	17	8	90	100	210	210	470	430	260	80	35
YWZ8-200/E30	ED30/5	135-310															43
YWZ8-300/E30	ED30/5	200-320	300	240	250	80	22	12	140	130	300	310	610	500	260	80	65
YWZ8-300/E50	ED50/6	200-550												540	340	97	80
YWZ8-300/E80	ED80/6	350-850															86
YWZ8-400/E50	ED50/6	600-750	400	320	325	130	22	14	180	180	350	355	760	660	450	97	120
YWZ8-400/E80	ED80/6	600-1300															125
YWZ8-400/E121	ED121/6	850-2000												650	450	120	150
YWZ8-500/E121	ED121/6	1000-2600	500	400	380	150	22	16	200	200	405	455	930	735	450	120	220
YWZ8-500/E201	ED201/6	1500-3700															
YWZ8-600/E121	ED121/6	1700-2800	600	475	475	170	27	20	240	220	500	545	1110	845	450	120	360
YWZ8-600/E201	ED201/6	1700-4300															
YWZ8-600/E301	ED301/6	3000-6500															
YWZ8-700/E201	ED201/6	3000-5000	700	550	540	200	34	25	280	270	575	615	1280	950	450	120	450
YWZ8-700/E301	ED301/6	3700-8000															
YWZ8-800/E301/12	ED301/12	6000-10000	800	600	620	240	34	28	320	310	670	650	1430	980	450	120	560

注：具体型号、结构外形的尺寸保留更改的权利。
Note:Our company reserves the rights to change the actual type and overall dimensions of the structure.

YWZ8(A)系列鼓式制动器技术参数及安装尺寸 *Technical date and dinensions of YWZ8(A) series drum beakes*

制动器型号 *Brake type*	推动器型号 *Thruster type*	制动力矩 *Braking torque (Nm)*	安装及外形尺寸 *Dimensions (mm)*														重量 *Weight (kg)*
			D	h1	k	i	d	n	b	F	G	E	H	A	L	C	
YWZ8-160/E23A	Ed23/5	80~160	160	132	130	55	14	6	65	90	150	165	390	415	200	80	25
YWZ8-200/E23A	Ed23/5	100~200	200	160	145	55	14	8	80	90	165	190	470	440	260	80	33
YWZ8-200/E30A	Ed30/5	140~280												406			39
YWZ8-250/E30A	Ed30/5	160~315	250	190	180	65	18	10	100	100	200	225	500	490	260	80	47
YWZ8-250/E50A	Ed50/6	250~500											550	490	320	97	61
YWZ8-300/E30A	Ed30/5	160~315	300	225	220	80	18	10	125	110	245	275	575	520	260	80	74
YWZ8-300/E50A	Ed50/6	250~500												580	340	97	86
YWZ8-300/E80A	Ed80/6	500~1000													340	97	88
YWZ8-315/E30A	Ed30/5	160~315	315	225	220	80	18	10	125	110	245	275	575	520	260	80	74
YWZ8-315/E50A	Ed50/6	250~500													340	97	86
YWZ8-315/E80A	Ed80/6	500~1000												580			88
YWZ8-400/E50A	Ed50/6	315~630	400	280	270	100	22	12	160	140	300	335	705	625	450	97	108
YWZ8-400/E80A	Ed80/6	630~1250															110
YWZ8-400/E121A	Ed121/6	900~1800										350	770	610		120	133
YWZ8-500/E80A	Ed80/6	800~1600	500	335	325	130	22	16	200	180	365	395	835	740	450	97	202
YWZ8-500/E121A	Ed121/6	1125~2250										410		730		120	212
YWZ8-500/E201A	Ed201/6	1600~3150															
YWZ8-630/E121/12A	Ed121/12	1400~2800	630	425	400	170	27	20	250	220	450	455	1020	840	450	120	309
YWZ8-630/E201/12A	Ed201/12	2250~4500															310
YWZ8-630/E301/12A	Ed301/12	3550~7100															315
YWZ8-710/E201/12A	Ed201/12	2500~5000	710	475	450	190	27	22	280	240	500	565	1170	1050	450	120	455
YWZ8-710/E301/12A	Ed301/12	4000~8000															460
YWZ8-800/E301/12A	Ed301/12	6300~12500	800	530	520	210	27	28	320	280	570	710	1410	1085	450	120	500

注：具体型号、结构外形的尺寸保留更改的权利。
Note:Our company reserves the rights to change the actual type and overall dimensions of the structure.

YWZ9系列电力液压鼓式制动器

YWZ9 series electro-hydraulic drum brakes

符合标准

Sandards compliant

■制动器安装尺寸和制动力矩参数符合GB6333-86和JB/ZQ4388-86(带A系列)标准，技术要求符合JB/T6406-2006标准。

■*The dimensions and braking torque parameters of series brakes comply withGB6333-86 and JB/ZQ4388-86 (with A-series)standard, technology requirements comply with JB/T6406-2006 standard.*

主要特点

Main Design Features

■联锁式退距均等装置和瓦块自动随位装置，可始终保持两侧瓦块退距均等且无需调整，完全避免因退距不均使一侧制动衬垫浮贴制动鼓的现象。

■主要摆动铰点均设有自润滑轴承，传动效率高，寿命长，在使用过程中无需润滑。

■制动弹簧在方营内布置并设有标尺，用户可十分方便地读出制动力矩值，免去测量和计算的麻烦。

■制动衬垫为卡装式整体成型结构，更换十分方便、快捷，备有半金属(无石棉)硬质和半硬质，软质(含石棉、无石棉)等不同材质的制动衬垫供用户选择。

■全部采用本公司新型推动器配套，动作灵敏，寿命长。

■*Interlocking shoe clearance balancing device and shoe auto-aligning device constantly equalize the clearance of brake shoes on both sides and make adjustment unnecessary, completely avoiding brake lining one side sticking to brake wheel.*

■ *At main hinge points are equipped with self-lubricating bearings, which make higher efficiency of transmission and longer performance life, and lubricating is unnecessary during the course of operation.*

■*Brake spring is arranged in side square tube and surveyor's rod is placed on one side. It is easy for customers to read braking torque value and avoid the troubles of measuring and computing.*

■*Brake lining is of card whole piece shaping structure, which is easy and quick to replace. Brake lining of variousmaterials such as half-metal (non-asbestos) hard and haft-hard, soft (include asbestos) substance are available for customer to choose.*

■ *Our company's new types of thrusters are adopted, which work acutely and have long life.*

附加装置

Options

●手动释放装置

●释放(开闸)或闭合(闭闸)限位开关，可实现制动器是否正常释放或闭合的信号显示。

●制动衬垫磨损自动补偿装置，可实现衬垫磨损时瓦块退距和制动力矩的无级自动补偿。

●衬垫磨损极限限位开关，可实现制动衬垫磨损到极限时的信号显示(注意：应用时须带自动补偿装置)。

●采用带下降延时阀的推动器驱动，可实现制动器的延时闭合。

● *Hand release lever.*

● *Open(Release) or close limit-switch, which indicates whether the brake is properly released or closed.*

● *Wear-self-compensation device, which realizes endless self-compensation of shoe clearance and torque when lining wears.*

● *Lining-wear limit-switch, equipped which signals will shown when wear of lining reaches the limit (note: self-compensation device should be equipped in application)*

● *Adopt thruster with fall delay valve as drive system which can realize closing delay of brake.*

使用条件

Operating conditions

●环境温度：-25~+40℃

●相对湿度：≤90%

●电源：三相交流50Hz(60)Hz

●电压等级：380.400(440,460)V

●周围工作环境中不得有易燃易爆及腐蚀气体。有特殊要求，在订货时协商确定

● *Ambient temperature:-25~+40℃.*

● *Relative humidity:≤90%*

● *Power:AC 3 phase 50Hz(60)Hz.*

● *Voltages:380.400(440.460)V.*

● *Around the workplace shall not commit any flammable, explosive and corrosive gases.*
Special requirements can be discussed in order.

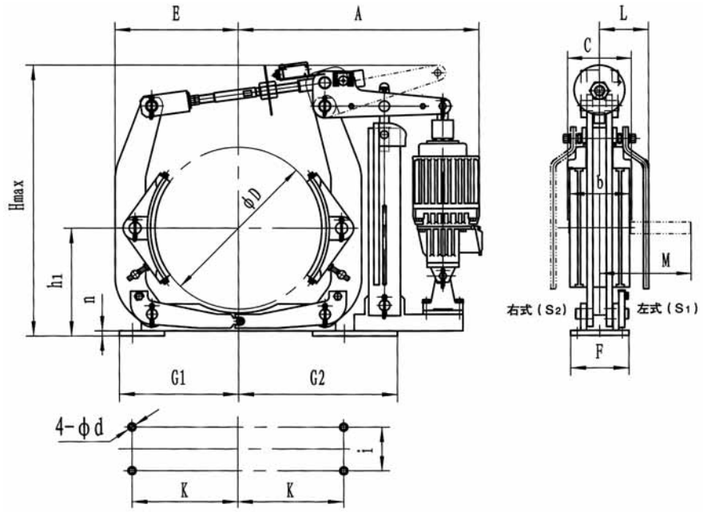

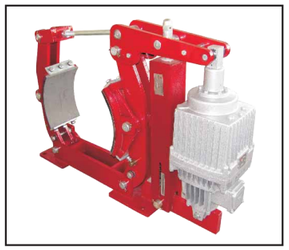

YWZ9系列 series

订货标记

Order Mark

YWZ9-□/□(A)-□-□□□

- 特殊要求(可用文字说明) *Special requirement (can be specified in words)* — F-防腐型 *Anti-Corrosion*
- 电源频率和电压等级(50Hz.380V时不标) *Power frequency and voltage(50Hz,380V unnecessary)*
- 附加装置 *Additional option*
  - K3-衬垫磨损极限限位开关 *Lining wear limit-switch*
  - K1-开闸限位开关 *Release limit-switch*
  - M-衬垫磨损补偿装置 *Lining wear compensator*
  - S1-手动释放装置（左侧布置） *Hand release lever(left)*
  - S2-手动释放装置（右侧布置） *Hand release lever(right)*
- 制动力矩或代号 *Brake torque or code*
- 产品型号 *Type*

订货示例

Order Example

YWZ9-315/E50-630-M.S 2. K3.60Hz,440V　　YWZ9-300/E50A

YWZ9系列技术参数及外形尺寸表 *Technical date and dinensions*

制动器型号 *Brake type*	推动器型号 *Thruster type*	制动轮直径 *Drum Diameter(mm)*	制动力矩 *Brake torque (Nm)*	退矩 *Back from the(Nm)*	A	b	C	d	E	F	G_1	G_2	H_{max}	h_1	i	k	M	n	L	重量 *Weight (kg)*
YWZ9-160/E23	Ed23/5	160	80-160	1.0	430	65	160	14	145	85	145	195	435	132	55	130	120	8	145	32.5
YWZ9-200/E23	Ed23/5	200	112-200	1.0	470	80	160	14	175	90	165	265	500	160	55	143	140	10	150	35
YWZ9-200/E30	Ed30/5		140-315																	38
YWZ9-250/E23	Ed23/5	250	140-250	1.0	535	100	160	18	205	110	200	290	570	190	65	180	160	12	180	42
YWZ9-250/E30	Ed30/5		180-315																	45
YWZ9-250/E50	Ed50/6		315-500		575		190													50
YWZ9-300/E23	Ed23/5	300	180-280	1.25	590	125	160	18	255	115	245	330	585	225	80	220	180	12	170	70
YWZ9-300/E30	Ed30/5		250-400																	70
YWZ9-300/E50	Ed50/6		4000630		630		190													75
YWZ9-300/E80	Ed80/6		630-1000																	80
YWZ9-315/E23	Ed23/5	325	180-280	1.25	590	125	160	18	255	115	245	330	585	225	80	220	180	12	170	70
YWZ9-315/E30	Ed30/5		250-400																	70
YWZ9-315/E50	Ed50/6		400-630		630		190													75
YWZ9-315/E80	Ed80/6		630-1000																	80
YWZ9-400/E30	Ed30/5	400	200-470	1.25	670	160	160	22	310	160	310	420	715	280	100	270	220	14	170	88
YWZ9-400/E50	Ed50/6		400-800		710		190													95
YWZ9-400/E80	Ed80/6		630-1250																	110
YWZ9-400/E121	Ed121/6		1000-2000		700		240						775							125
YWZ9-500/E50	Ed50/6	500	450-1000	1.25	810	200	190	22	385	180	365	535	810	335	130	325	280	16	180	175
YWZ9-500/E80	Ed80/6		800-1600																	
YWZ9-500/E121	Ed121/6		1120-2500		800		240						845							190
YWZ9-500/E201	Ed201/6		2000-4000																	
YWZ9-600/E121	Ed121/6	600	1800-2800	1.6	925	240	240	26	470	220	450	600	1035	425	170	400	340	25	185	300
YWZ9-600/E201	Ed201/6		2500-4500																	
YWZ9-600/E301	Ed301/6		4000-6500																	305
YWZ9-630/E121	Ed121/6	630	1800-3150	1.6	925	240	240	26	470	220	450	600	1035	425	170	400	340	25	185	310
YWZ9-630/E201	Ed201/6		2500-5000																	
YWZ9-630/E301	Ed301/6		4000-7100																	315
YWZ9-700/E201	Ed201/6	700	2500-5600	1.6	980	280	240	27	525	240	500	650	1140	475	190	450	360	30	220	420
YWZ9-700/E301	Ed301/6		4000-8000																	425
YWZ9-710/E201	Ed201/6	710	2500-5600	1.6	980	280	240	27	525	240	500	650	1140	475	190	450	360	30	220	420
YWZ9-710/E301	Ed301/6		4000-8000																	425
YWZ9-800/E301/12	Ed301/12	800	10500-12500	2.0	1230	320	240	27	595	280	570	830	1355	530	210	520	440	30	240	545

注：①600及以上规格制动器带M功能时，使用短行程推动器。

②具体型号，结构外形尺寸保留更改的权利。

③根据用户需要可生产各种常开制动器，防爆产品及非标产品。

④根据用户需要可生产匹配YTI推动器。（注：外形尺寸有变化）

Note:①Short-stroke thrusters will be adopted for thruster 600 or above tupes with M function.

②Our company reserves the rights to change the actual type and overall dimensions of the structure.

③According to user needs to produce a variety of normally open brake , explosion-proof products and non-standard products.

④Match the user needs to produce YTI engine. (Note : Dimension change)

YWZ9(A)系列技术参数及外形尺寸表 *Technical date and dinensions*

制动器型号 *Brake type*	推动器型号 *Thruster type*	制动力矩 *Brake torque (Nm)*	退矩 *Back from the(Nm)*	A	b	C	D	d	E	F	G_1	G_2	H_{max}	h_1	i	k	M	n	L	G_3	重量 *Weight (kg)*
YWZ9-200/E23A	Ed23/5	100-200	0.7	470	90	160	200	17	175	100	210	265	510	170	60	175	140	8	150	75	32
YWZ9-200/E30A	Ed30/5	140-315																			43
YWZ9-300/E30A	Ed30/5	250-400	0.8	590	140	160	300	22	255	130	295	330	605	240	80	250	180	12	170	135	65
YWZ9-300/E50A	Ed50/6	400-630		630		190															80
YWZ9-300/E80A	Ed80/6	630-1000																			92
YWZ9-400/E50A	Ed50/6	400-800	1.2	710	180	190	400	22	310	180	350	420	755	320	130	325	220	14	170	150	120
YWZ9-400/E80A	Ed80/6	630-1250																			130
YWZ9-400/E121A	Ed121/6	1000-2000		700		240							820								150
YWZ9-500/E80A	Ed80/6	800-1600	1.2	810	200	240	500	22	380	200	405	535	880	400	150	380	280	16	180	205	220
YWZ9-500/E121A	Ed121/6	1250-2500		800									900								
YWZ9-500/E201A	Ed201/6	2000-4000											900								
YWZ9-600/E121A	Ed121/6	1800-2800	1.3	925	240	240	600	26	470	220	500	600	1080	475	170	475	340	20	185	240	305
YWZ9-600/E201A	Ed201/6	2500-4500																			
YWZ9-600/E301A	Ed301/6	4000-6500																			
YWZ9-700/E201A	Ed201/6	2500-5600	1.3	980	280	240	700	34	530	270	570	650	1290	550	200	540	380	25	220	300	425
YWZ9-700/E301A	Ed301/6	4000-8000																			
YWZ9-800/E301A	Ed301/12	12500	2.0	1230	320	240	800	34	600	310	670	830	1430	600	240	620	420	34	240	310	545

注：①600及以上规格制动器带M功能时，使用短行程推动器。

②具体型号，结构外形尺寸保留更改的权利。

③根据用户需要可生产各种常开制动器，防爆产品及非标产品。

④根据用户需要可生产匹配YTI推动器。（注：外形尺寸有变化）

Note:①Short-stroke thrusters will be adopted for thruster 600 or above tupes with M function.

②Our company reserves the rights to change the actual type and overall dimensions of the structure.

③According to user needs to produce a variety of normally open brake , explosion-proof products and non-standard products.

④Match the user needs to produce YTI engine. (Note : Dimension change)

YWZ9-F系列电力液压鼓式制动器

YWZ9-F series electro-hydraulic drum brakes

外形尺寸图 Outline dimension drawing

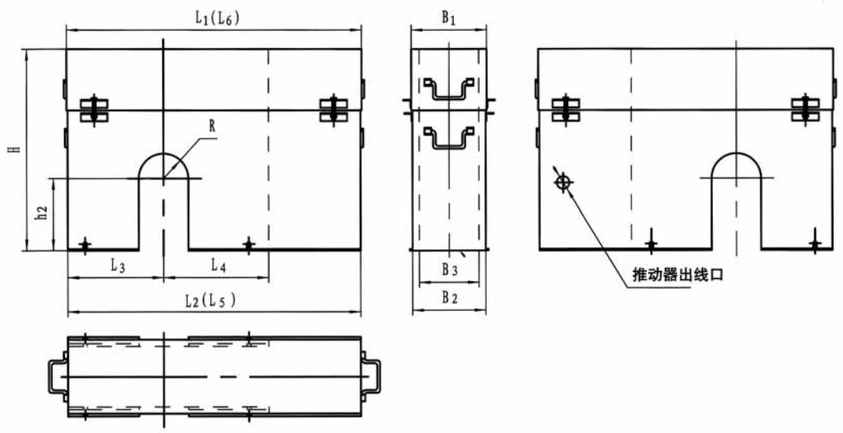

注：Φ160~Φ315防护罩为整体结构、Φ400~Φ800防护罩为上下分体结构。
图示B3、L4为T形防护罩尺寸，形防护罩为整体结构。
若匹配Ed隔爆型推动器时，见图示L5、L6尺寸，出线管口将伸出防护罩的外面。
若制动器加装附加功能，防护罩外形尺寸有所变化。

Note: The diameter of 160~315 dia protective cover for the overall structure, diameter of 400~800 dia protective cover for upper and lower body structure.
The B3, L4 T shaped shield size, shape shield is an integral structure.
If the matching Ed flameproof type drive device, see the L5, L6 size, outlet nozzle will extend the outside protective cover.
If the brake installed additional function, protective cover size change.

订货标记 Order Mark

YWZ9-F□/□□□-□

- 制动器附加功能代号 *Additional brake function code*
- 推动器附加装置 *Pusher attachments*
- 推动器推力代号 *Code to promote the thrust*
- 推动器代号：“E”为Ed普通型，“B”为隔爆型 *Thrusters code : "E" as Ed ordinary type , "B" for the explosion-proof*
- 制动轮直径 *Drum Diameter(mm)*
- “F”表示防护罩代号 *"F" , said protective cover letter*
- 系列代号 *Series Code*

制动器附加功能表

附加功能代号 *Additional features code*	附加功能 *Additional features*
M	衬垫磨损补偿装置 *Lining wear compensator*
K1	开闸（上升）显示行程开关 *Gate (up) shows limit switch*
K2	闭闸（下降）显示行程开关 *Closed gate (down) shows the limit switch*
K3	衬垫磨损极限限位开关 *Lining wear limit-switch*
S1	手动释放装置（右侧布置） *Hand release lever(right)*
S2	手动释放装置（左侧布置） *Hand release lever(left)*

防护罩尺寸表 *Guard Size Chart*

制动器型号 *Brake type*	推动器型号 *Thruster type*	制动轮直径 *Drum Diameter (mm)*	R	H	h_2	L_1	L_2	L_3	L_4	B_1	B_2	B_3	L_5	L_6	重量 *Weight (kg)*
YWZ9-F160/E23	Ed23/5	160	50	457	124	615		165	218	190		95			10
YWZ9-F200/E23	Ed23/5	200	53	520	150	685		195	258	190		110			13
YWZ9-F200/E30	Ed30/5												753		
YWZ9-F250/E23	Ed23/5	250	63	590	178	780		225	323	190		130			16
YWZ9-F250/E30	Ed30/5												848		
YWZ9-F250/E50	Ed50/6					815			308	220			870		17
YWZ9-F300/E23	Ed23/5	300	83	605	213	885		275	378	190		135			20
YWZ9-F300/E30	Ed30/5												953		
YWZ9-F300/E50	Ed50/6					925			363	220			975		22
YWZ9-F300/E80	Ed80/6														
YWZ9-F315/E23	Ed23/5	315	83	605	213	885		275	378	190		155			20
YWZ9-F315/E30	Ed30/5												953		
YWZ9-F315/E50	Ed50/6					925			363	220			975		22
YWZ9-F315/E80	Ed80/6														
YWZ9-F400/E30	Ed30/5	400	93	735	266	1028	1020	330	460	198	190	190	1090	1098	30
YWZ9-F400/E50	Ed50/6					1068	1060		445	228	220		1112	1120	
YWZ9-F400/E80	Ed80/6														
YWZ9-F400/E121	Ed121/6			795		1058	1050		428	278	270				
YWZ9-F500/E50	Ed50/6	500	108	825	319	1248	1240	410	544	228	220	240	1290	1298	36
YWZ9-F500/E80	Ed80/6														
YWZ9-F500/E121	Ed121/6			865		1238	1230		527	278	270				38
YWZ9-F500/E201	Ed201/6														
YWZ9-F600/E121	Ed121/6	600	113	1045	400	1443	1435	490		288	280		1500	1508	45
YWZ9-F600/E201	Ed201/6														
YWZ9-F600/E301	Ed301/6														
YWZ9-F630/E121	Ed121/6	630	113	1045	400	1443	1435	490		288	280		1500	1508	50
YWZ9-F630/E201	Ed201/6														
YWZ9-F630/E301	Ed301/6														
YWZ9-F700/E201	Ed201/6	700	130	1145	445	1553	1545	550		288	280		1617	1625	60
YWZ9-F700/E301	Ed301/6														
YWZ9-F710/E201	Ed201/6	710	130	1145	445	1553	1545	550		288	280		1617	1625	60
YWZ9-F710/E301	Ed301/6														
YWZ9-F800/E301/12	Ed301/12	800	150	1365	500	1883	1875	620		288	280		1946	1954	80

注：匹配Ed推动器
Note : Matching Ed thrusters

YW系列电力液压鼓式制动器

YW series electro-hydraulic drum brakes

符合标准

Sandards compliant

■YW系列制动器连接尺寸和技术要求符合JB/T6406-2006标准，制动力矩参数符合DIN15435标准；

■YW系列配套符合DIN15430标准的Ed系列推动器；本系列适用于新设计、新主机配套选用。

■ *The dimensions and technology requirements of YW, YWB series brakes comply with JB/T8406-2006 standerd, braking torque parameters comply with DIN15435 standard;*

■ *YW series brakes are equipped with ED series thrusters which comply with DIN15430 standard. This series brakes is mainly used for new design and new main machines.*

主要特点

Main Design Features

■联锁式退距均等装置和瓦块自动随位装置，可始终保持两侧瓦块退距均等且无需调整，完全避免因退距不均使一侧制动衬垫浮贴制动鼓的现象。

■主要摆动铰点均设有自润滑轴承，传动效率高，寿命长，在使用过程中无需润滑。

■制动弹簧在方营内布置并设有标尺，用户可十分方便地读出制动力矩值，免去测量和计算的麻烦。

■制动衬垫为卡装式整体成型结构，更换十分方便、快捷，备有半金属(无石棉)硬质和半硬质，软质(含石棉、无石棉)等不同材质的制动衬垫供用户选择。

■全部采用本公司新型推动器配套，动作灵敏，寿命长。

■ *Interlocking shoe clearance balancing device and shoe auto-aligning device constantly equalize the clearance of brake shoes on both sides and make adjustment unnecessary, completely avoiding brake lining one side sticking to brake wheel.*

■ *At main hinge points are equipped with self-lubricating bearings, which make higher efficiency of transmission and longer performance life, and lubricating is unnecessary during the course of operation.*

■ *Brake spring is arranged in side square tube and surveyor's rod is placed on one side. It is easy for customers to read braking torque value and avoid the troubles of measuring and computing.*

■ *Brake lining is of card whole piece shaping structure, which is easy and quick to replace. Brake lining of variousmaterials such as half-metal (non-asbestos) hard and haft-hard, soft (include asbestos) substance are available for customer to choose.*

■ *Our company's new types of thrusters are adopted, which work acutely and have long life.*

附加装置

Options

●手动释放装置

●释放(开闸)或闭合(闭闸)限位开关，可实现制动器是否正常释放或闭合的信号显示。

●制动衬垫磨损自动补偿装置，可实现衬垫磨损时瓦块退距和制动力矩的无级自动补偿。

●衬垫磨损极限限位开关，可实现制动衬垫磨损到极限时的信号显示(注意：应用时须带自动补偿装置)。

●采用带下降延时阀的推动器驱动，可实现制动器的延时闭合。

● *Hand release lever.*

● *Open(Release) or close limit-switch, which indicates whether the brake is properly released or closed.*

● *Wear-self-compensation device, which realizes endless self-compensation of shoe clearance and torque when lining wears.*

● *Lining-wear limit-switch, equipped which signals will shown when wear of lining reaches the limit (note: self-compensation device should be equipped in application)*

● *Adopt thruster with fall delay valve as drive system which can realize closing delay of brake.*

使用条件

Operating conditions

●环境温度：-25~+40℃

●相对湿度：≤90%

●电源：三相交流50Hz(60)Hz

●电压等级：380.400(440,460)V

●周围工作环境中不得有易燃易爆及腐蚀气体。有特殊要求，在订货时协商确定

● *Ambient temperature:-25~+40℃.*

● *Relative humidity:≤90%*

● *Power:AC 3 phase 50Hz(60)Hz.*

● *Voltages:380.400(440.460)V.*

● *Around the workplace shall not commit any flammable, explosive and corrosive gases. Special requirements can be discussed in order.*

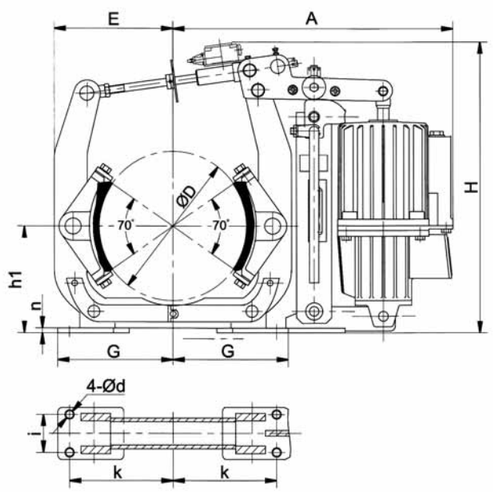

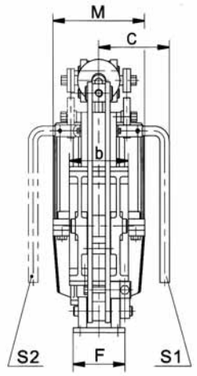

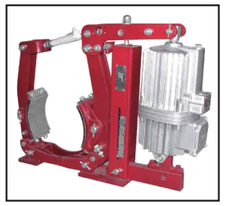

YW 系列 series

订货标记

Order Mark

YW □/□-□-□ □ □

- 特殊要求(可用文字说明) *Special requirement (can be specified in words)*
  - F-防腐型 *Anti-Corrosion*
- 电源频率和电压等级(50Hz.380V时不标) *Power frequency and voltage(50Hz,380V unnecessary)*
- 附加装置 *Additional option*
  - K3-衬垫磨损极限限位开关 *Lining wear limit-switch*
  - K1-开闸限位开关 *Release limit-switch*
  - M-衬垫磨损补偿装置 *Lining wear compensator*
  - S1-手动释放装置（左侧布置） *Hand release lever(left)*
  - S2-手动释放装置（右侧布置） *Hand release lever(right)*
- 制动力矩或代号 *Brake torque or code*
- 产品型号 *Type*

订货示例

Order Example

YW315/E50-630-M.S 2. K3.60Hz,440V　　YW315/E50

YW 系列鼓式制动器技术参数及安装尺寸 *Technical date and dinensions of YW series drum beakes*

制动器型号 *Brake type*	推动器型号 *Thruster type*	制动力矩 *Braking torque (Nm)*	安装及外形尺寸 *Dimensions (mm)*														重量 *Weight (kg)*
			D	h1	k	i	d	n	b	F	G	E	H	A	M	C	
YW160/E23	Ed23/5	80~160	160	132	130	55	14	8	65	90	150	140	400	420	160	150	33
YW200/E23	Ed23/5	100~200	200	160	145	55	14	10	70	90	165	170	490	450	160	160	35
YW200/E30	Ed30/5	140~280															38
YW250/E23	Ed23/5	125~250	250	190	180	65	18	12	90	110	200	205	580	545	160	180	45
YW250/E30	Ed30/5	160~315															49
YW250/E50	Ed50/6	250~500													195	180	53
YW315/E30	Ed30/5	200~400	315	230	220	80	18	12	110	110	245	260	585	590	160	160	70
YW315/E50	Ed50/6	315~630												620	195	180	75
YW315/E80	Ed80/6	500~1000															80
YW400/E50	Ed50/6	400~800	400	280	270	100	22	14	140	160	300	305	710	710	195	180	138
YW400/E80	Ed80/6	630~1250															140
YW400/E121	Ed121/6	1000~2000											780	700	240	200	155
YW500/E80	Ed80/6	800~1600	500	340	325	130	22	16	180	180	365	370	860	810	197	180	176
YW500/E121	Ed121/6	1250~2500												800	240	200	206
YW500/E201	Ed201/6	2000~4000															208
YW630/E121	Ed121/6(12)	1600~3150	630	420	400	170	27	20	225	220	450	455	1025	925	240	200	309
YW630/E201	Ed201/6(12)	2500~5000															310
YW630/E301	Ed301/6(12)	3550~7100															315
YW710/E201	Ed201/6(12)	2500~5000	710	470	450	190	27	22	255	240	500	520	1135	985	240	240	435
YW710/E301	Ed301/6(12)	4000~8000															440
YW800/E301	Ed301/6(12)	5000~12500	800	530	520	210	27	28	280	310	570	620	1360	1227	240	240	600

注：600及以上规格制动器带M功能时，使用短行程推动器。
具体型号、结构外形的尺寸保留更改的权利。
Note:Short-stroke thrusters will be adopted for thruster 600 or above tupes with M function.
Our company reserves the rights to change the actual type and overall dimensions of the structure.

YW-L系列
电力液压鼓式制动器
YW-L series electro-hydraulic drum brakes

符合标准
Sandards compliant

■YW-L系列制动器连接尺寸及制动力矩参数符合JB/T6406-2006标准和DIN15435标准；配套符合DIN15430标准的Ed系列推动器。本系列主要适用于安装空间较小，YW、YWZ9、YWZ8等形式无法布置的场所。

■The dimensions and braking torque parameters of YW-L series brakes comply with JB/T6406-2006 and DIN15435 standard, They are equipped with Ed series thrusters which comply wilh DIN15430 standard. This series brakes are mainly used for minor installation room and where YW, YWZ9, YWZ8 series can't be installed.

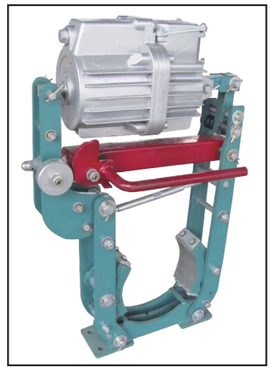

YW-L系列 *series*

主要特点
Main Design Features

■联锁式退距均等装置和瓦块自动随位装置，可始终保持两侧瓦块退距均等且无需调整，完全避免因退距不均使一侧制动衬垫浮贴制动轮的现象。
■主要摆动铰点均设有自润滑轴承，传动效率高．寿命长，在使用过程中无需润滑。
■制动弹簧在方管内布置并设有标尺，用户可十分方便地读出制动力矩值，免去测量和计算的麻烦。
■制动衬垫为卡装式整体成型结构，更换十分方便，快捷，备有半金属(无石棉)硬质和半硬质，软质(含石棉、无石棉)等不同材质的制动衬垫供用户选择。
■全部采用本公司新型ED推动器配套，动作灵敏，寿命长。

■ Interlocking shoe clearance balancing device and shoe auto-aligning device constanlly equalize the clearance of brake shoes on both sides and make adjustment unnecessary, completely avoiding brake lining one sidesticking to brake wheel.
■ At main hinge points are equipped with self-lubricatng bearings, which make higher efficiency of transmission and longer performance life, and lubricating is unnecessary during the course of operation.
■ Brake spring is arranged inside square tube and surveyor's rod is placed on one side. It is easy for customers to read braking torque value and avoid the troubles of measuring and computing.
■Brake lining is of card whole piece shaping structure, which is easy and quick to replace. Brake lining of various materials such as half-metal (non-asbestos) hard and half-hard, soft (include asbestos) substance are available for customer to choose.
■ Our company's new types of ED thrusters are adopted, which work acutely and have long life.

附加装置
Options

●手动释放装置
●释放(开闸)或闭合(闭闸)限位开关，可实现制动器是否正常释放或闭合的信号显示。

●制动衬垫磨损自动补偿装置，可实现衬垫磨损时瓦块退距和制动力矩的无级自动补偿。

●衬垫磨损极限限位开关，可实现制动衬垫磨损到极限时的信号显示(注章：应用时须带自动补偿装置)。

●采用带下降延时阀的推动器驱动，可实现制动器的延时闭合。

●Hand release lever.

●Open(Release) or close limit-switch, which indicates whether the brake is properly released or closed.

●Wear-self-compensation device, which realizes endless self-compensation of shoe clearance and torque when lining wears.

● Lining-wear limit-switch, equipped which signals will shown when wear of lining reaches the limit (note: self-compensation device should be equipped in application).

● Adopt thruster with fall delay valve as drive system which can realize closing delay of brake.

订货标记

Order Mark

YW-L□/□-□-□-□□

- 特殊要求(可用文字说明) *Special requirement (can be specified in words)*
  - F-防腐型 *Anti-Corrosion*
- 电源频率和电压等级(50Hz,380V时不标) *Power frequency and voltage(50Hz,380V unnecessary)*
- 附加装置 *Additional option*
  - K3-衬垫磨损极限限位开关 *Lining wear limit-switch*
  - K1-开闸限位开关 *Release limit-switch*
  - M-衬垫磨损补偿装置 *Lining wear compensator*
- 制动力矩 *Brake torque*
  - S1-手动释放装置（左侧布置） *Hand release lever(left)*
  - S2-手动释放装置（右侧布置） *Hand release lever(right)*
- 产品型号 *Type*

订货示例

Order Example

YW-L315/E50-630-M.S1.K1 60Hz/440V.F　　YW-L200/E30

使用条件

Operating conditions

●环境温度：-25~+40℃

●相对湿度：≤90%

●电源：三相交流380(400)V50Hz,460(440)V60Hz

●电压等级：380V.400(400.460)V

●周围工作环境中不得有易燃易爆及腐蚀气体。
有特殊要求，在订货时协商确定

●Ambient temperature:-25~+40℃I

●Relative humidity:≤90%

●Power:AC 3 phase 380(400)V 50Hz、460(440)V60Hz

● Voltages:380.400(440.460)V

● Around the workplace shall not commit any flammable, explosive and corrosive gases.
Special requirements can be discussed in order.

外形及安装尺寸 Outline and installation dimension

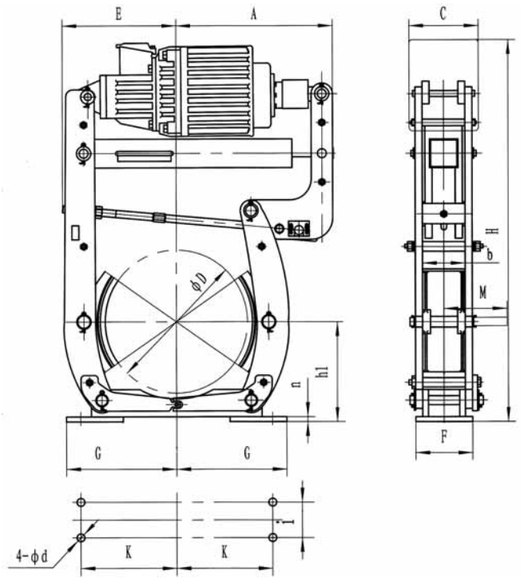

YW-L系列鼓式制动器技术参数及安装尺寸 *Technical date and dinensions of YW-Lseries drum brakes*

制动器型号 Brake type	推动器型号 Thruster type	制动力矩 Braking torque (Nm)	安装及外形尺寸 Dimensions (mm)														重 量 Weight (kg)
			D	h1	k	i	d	n	b	F	G	E	A	H	C	M	
YW-L160/E23	Ed 23/5	80~160	160	132	130	55	14	8	65	90	150	210	250	630	160	120	36
YW-L200/E23	Ed 23/5	100~200	200	160	145	55	14	10	80	100	165	210	255	710	160	165	46
YW-L200/E30	Ed 30/5	140~280															52
YW-L250/E23	Ed 23/5	125~250	250	190	180	65	18	12	100	110	200	230	310	790	160	225	53
YW-L250/E30	Ed 30/5	160~315															61
YW-L250/E50	Ed 50/6	250~500												865	195	225	69
YW-L300/E30	Ed 30/5	200~400	300	225	220	80	18	12	125	145	245	275	350	910	160	225	76
YW-L300/E50	Ed 50/6	315~630												930	195		80
YW-L300/E80	Ed 80/6	500~1000															92
YW-L315/E30	Ed 30/5	200~400	315	230	220	80	18	12	125	145	245	275	350	900	160	225	78
YW-L315/E50	Ed 50/6	315~630												930	195		81
YW-L315/E80	Ed 80/6	500~1000															92
YW-L400/E50	Ed 50/6	400~800	400	280	270	100	22	14	160	160	310	340	440	1075	195	280	102
YW-L400/E80	Ed 80/6	630~1250															114
YW-L400/E121	Ed 121/6	1000~2000												1065	240	280	132
YW-L500/E80	Ed 80/6	800~1600	500	340	325	130	22	18	200	200	365	400	435	1245	195	350	159
YW-L500/E121	Ed 121/6	1250~2500												1235	240		176
YW-L500/E201	Ed 201/6	2000~4000															181

注：具体型号、结构外形的尺寸保留更改的权利。
Note:Our company reserves the rights to change the actual type and overall dimensions of the structure.

YW-K系列电力液压鼓式制动器

YWK series electro-hydraulic drum brakes

应用:YW-K系列电力液压鼓式制动器，主要用于各类通用桥、门式起重机的大车运行机够的减速制动，也可用于非提升式绞车驱动装置减速制动。

Application:

YW-K Series electro-hydraulic drum brakes can be extensively used for mechanism deceleration and stop/braking of various transport equipments on GM bridge, portal crane, and non-hoisting winches.

符合标准

Sandards compliant

◆YW-K系列常开式制动器连接尺寸和制动力矩参数符合JB/T6406-2006和DIN15435标准，配套符合DIN5430标准的ED系列推动器。

◆The dimensions and braking torque parameters of YWK series normal open brakes comply with JB/T6406-2006standard and DIN15435 standard; they are equipped with Ed series thrusters which comply with DIN15430 standard.

主要特点

Main Design Features

◆联锁式退距均等装置和瓦块自动随位装置，可始终保持两侧瓦块退距均等且无需调整，完全避免因退距不均使一侧制动衬垫浮贴制动轮的现象。

◆主要摆动铰点均设有自润滑轴承，传动效率高，寿命长，在使用过程中无需润滑。

◆制动衬垫为卡装式整体成型结构，更换十分方便、快捷，备有半金属(无石棉)硬质和半硬质，软质(含石棉、无石棉)等不同材质的制动衬垫供用户选择。

◆Interlocking shoe clearance balancing device and shoe auto-aligning device constanlly equalize the clearance of brake shoes on both sides and make adjustment unnecessary, completely avoiding brake lining one side sticking to brake wheel.

◆At main hinge points are equipped with self-lubricating beatings, which make higher efficiency of transmission and longer perfomance life, and lubricating is unnecessary during the course of operation.

◆Brake lining is of card whole piece shaping structure, which is easy and quick to replace. Brake lining of various materials such as half-metal (non-asbestos) hard and half-hard, soft (include asbestos) substance are available for customer to choose.

订货标记

Order Mark

YW-K□/□-□-□□

- 特殊要求(可用文字说明) *Special requirement (can be specified in words)*
- 电源频率和电压等级(50Hz.380V时不标) *Power frequency and voltage(50Hz,380V unnecessary)*
- 制动力矩 *Brake torque*
- 产品型号 *Type*

订货示例

Order Example

YW-K200/E30

使用条件

Operating conditions

- 环境温度：-25~+40℃
- 相对湿度：≤90%
- 电源：三相交流380(400)V50Hz,460(440)V60Hz
- 周围工作环境中不得有易燃易爆及腐蚀气体。
  有特殊要求，在订货时协商确定

- *Ambient temperature:-25~+40℃I*
- *Relative humidity:≤90%*
- *Power:AC 3 phase 380(400)V 50Hz、460(440)V60Hz*
- *Around the workplace shall not commit any flammable, explosive and corrosive gases.*
  Special requirements can be discussed in order.

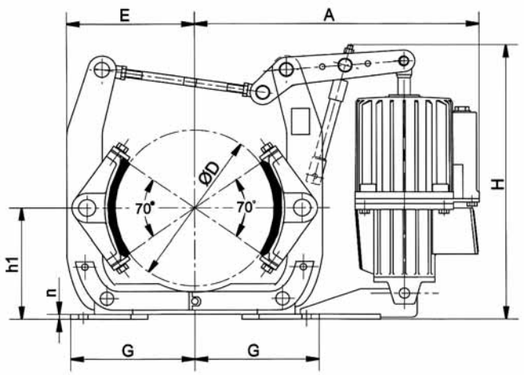

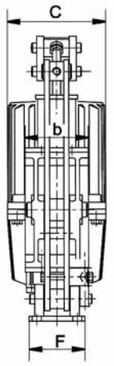

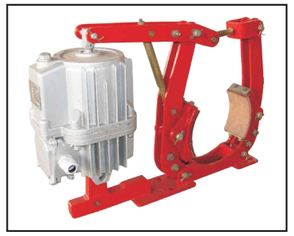

YW-K系列*series*

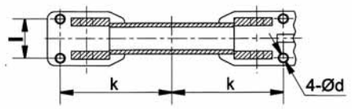

YW-K系列鼓式制动器技术参数及安装尺寸 *Technical date and dinensions*

制动器型号 *Brake type*	推动器型号 *Thruster type*	制动力矩 *Braking torque (Nm)*	安装及外形尺寸 *Dimensions (mm)*													重 量 *Weight (kg)*
			D	h1	k	i	d	n	b	F	G	E	H	A	C	
YW-K160/E23	Ed23/5	100	160	132	130	55	14	8	65	90	150	145	390	410	160	28
YW-K200/E23	Ed23/5	140	200	160	145	55	14	8	80	90	165	170	470	435	160	32
YW-K200/E30	Ed30/5	224														35
YW-K250/E23	Ed23/5	200	250	190	180	65	18	10	100	100	200	200	470	485	160	43
YW-K250/E30	Ed30/5	250														46
YW-K250/E50	Ed50/6	450										205	555	525	195	52
YW-K315/E30	Ed30/5	315	315	230	220	80	18	10	125	110	245	255	575	515	160	67
YW-K315/E50	Ed50/6	560												575	195	86
YW-K315/E80	Ed80/6	900														88
YW-K400/E50	Ed50/6	710	400	280	270	100	22	14	160	140	300	305	695	615	195	99
YW-K400/E80	Ed80/6	1120														100
YW-K400/E121	Ed121/6	1800											750		240	120
YW-K500/E80	Ed80/6	1400	500	340	325	130	22	16	200	180	355	370	835	715	195	148
YW-K500/E121	Ed121/6	2240												705	240	162
YW-K500/E201	Ed201/6	3550														162

注：具体型号、结构外形的尺寸保留更改的权利。
Note:Our company reserves the rights to change the actual type and overall dimensions of the structure.

YW-E系列
电力液压鼓式制动器
YW-E series electro-hydraulic drum brakes

应用: 广泛应用于各种大中型室外起重机的大车运行机构，具有优越的减速制动性能和理想的防风制动效果；该产品还可用于中大型特种起重机的大、小车运行机构，可实现平稳的减速制动和可靠的维持制动；该产品用干皮带运输的工作制动也具有理想的制动性能。

■YW-E系列制动器为两步制动式制动装置。第一步制动施加一个较小的(可根据需要在规定范围内调整)制动力距，进行较平稳的减速制动，待机构停止运动后，第二步制动开始，并增加一个制动力矩(也可在规定范围内调整)，实现可靠的维持或防风制动。第二步相对干第一步制动开始的延时时间，可根据实际需要通过阻尼油缸回路中单向调速阀进行调整(调整范围为1~15秒)。本系列制动器连接尺寸和制动力矩参数符合JB/T6406-2006、JB/ZQ4388-86(带A系列)和DIN15435标准，配套符合DIN15430标准的Ed系列推动器。

Application:

Two-step, Delayed electro-hydraulic drum brakes can be extensively used on large/middle outdoor cranes, having excellent deceleration braking and storm braking performance. It can also be used on large and middle special cranes, realizing stable deceleration braking and maintenance braking. Idel beaking performance of these series products is also represented on Belt transport vehicles.

■ The YW-E series brake is two-step braking device. In the first braking step, a minor torque (adjustable with the prescribed limits) is exsrted to make stable deceleration braking. When body stops, the second step starts. A bigger torque (adjustable with the prescribed limits) is exsrted to realize reliable maintenance or storm braking. The interval time between the two syeps staring can be adjustde by damping single way throttle in cylinder circuit(with 1-15 seconds). The dimensions and braking torque parameters of this series brakes comply with JB/T6406-2006,JB/ZQ4388-86 standard(with A series), and DIN15435 standard. Thrusters equipped on them are ED series thrusters which comply with DIN15430 standard.

主要特点
Main Design Features

■联锁式退距均等装置和瓦块自动随位装置，可始终保持两侧瓦块退距均等且无需调整，完全避免因退距不均使一侧制动衬垫浮贴制动轮的现象。

■主要摆动铰点均设有自润滑轴承，传动效率高，寿命长．在使用过程中无需润滑。

■制动弹簧在方管内布置并设有标尺，用户可十分方便地读出制动力矩值，免去测量和计算的麻烦。

■制动衬垫为卡装式整体成型结构，更换十分方便，快捷，备有半金属(无石棉)硬质和半硬质，软质(含石棉，无石棉)等不同材质的制动衬垫供用户选择。

■全部采用本公司新型推动器配套，动作灵敏，寿命长。

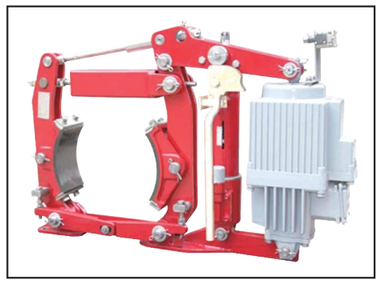

YW-E系列 *series*

■ Interlocking shoe clearance balancing device and shoe auto-aligning device constantly equalize the clearance of brake shoes on both sides and make adjustment unnecessary, completely avoiding brake lining one side sticking to brake wheel.

■ At main hinge points are equipped with self-lubricating bearings, which make higher efficiency of transmission and longer performance life, and lubricating is unnecessary during the course of operation.

■ Brake spring is arranged inside square tube and surveyor's rod is placed on one side. It is easy for customers to read braking torque value and then avoid the troubles of measuring and computing.

■ Brake lining is of card whole piece shaping structure, which is easy and quick to replace. Brake lining of various materials such as half-metal (non-asbestos) hard and half-hard, sofe (include asbestos) substance are available for customer to choose.

■ Our company's new types of rhrusters are adopted, which work acutely and have long life.

附加装置
Options

■手动释放装置。

■释放(开闸)或闭合(闭闸)指示开关，可实现制动器是否正常释放或闭合的信号显示或联锁保护。

■衬垫磨损极限限位开关，可实现制动衬垫磨损到极限时的信号显示(注意：应用时需带自动补偿装置)或联锁保护。

■制动衬垫磨损自动补偿装置，可实现衬垫膺损时瓦块退距和制动力矩的无级自动补偿。

■ Hand released lever.

■ Release (open) or close limit switch, which indicates whether brake is properly released or closed and provides interlocking protection.

■ Lining-wear limit switch, which indicates signals when wear of lining reaches the limit (Note: self-compensator should be equipped in application) and provides interlocking protection.

■ Wear-self-compensation device, which realizes endless self-compensationg of shoe clearance and torque when lining wears.

订货标记
Order Mark

YW-E□ / □-□ □ □

- 特殊要求(可用文字说明) *Special requirement (can be specified in words)*
  - F-防腐型 *Anti-Corrosion*
- 电源频率和电压等级(50Hz.380V时不标) *Power frequency and voltage(50Hz,380V unnecessary)*
- 附加装置 *Additional option*
  - K3-衬垫磨损极限限位开关 *Lining wear limit-switch*
  - K1-开闸限位开关 *Release limit-switch*
  - M-衬垫磨损补偿装置 *Lining wear compensator*
  - S1-手动释放装置（左侧布置） *Hand release lever(left)*
  - S2-手动释放装置（右侧布置） *Hand release lever(right)*
- 产品型号 *Type*

订货示例
Order Example

YW-E200/E30 MS1　　YW-E315/E50 S1K1 440V60HZ

使用条件

Operating conditions

- 环境温度：-25~+40℃
- 相对湿度：≤90%
- 电源：三相交流380(400)V50Hz,460(440)V60Hz
- 适应的工作制：连续(S1)和断续(S3-60%,操作频率≤1200/h)工作制

  有特殊要求，在订货时协商确定

- *Ambient temperature:-25~+40℃I*
- *Relative humidity:≤90%*
- *Power:AC 3 phase 380(400)V 50Hz、460(440)V60Hz*
- *Operating duty:intermittent(S3-60%,≤1200/h)and continuous(S1)*

  Special requirements can be discussed in order.

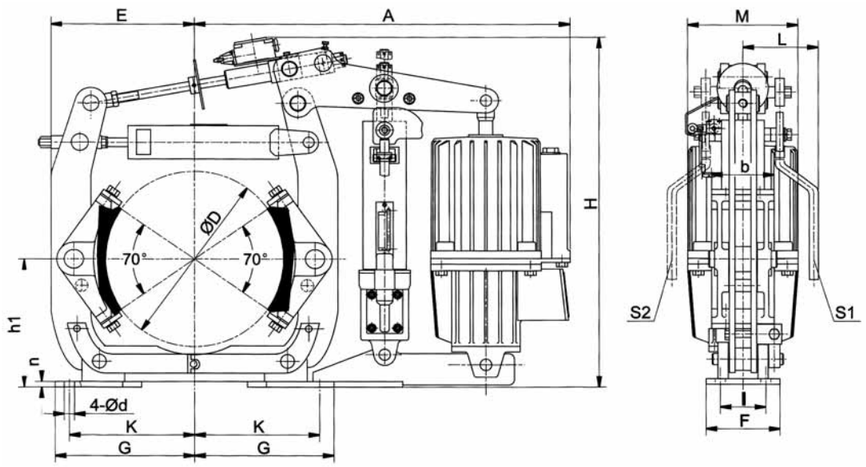

YW-E系列制动器技术参数及安装尺寸 *Technical date and dinensions*

制动器型号 Brake type	推动器型号 Thruster type	制动力矩 Braking torque(Nm) 第一步 First step	第二步 Second step	总力矩(最大) Torque Sum (max)	安装及外形尺寸 Dimensions (mm) D	h1	k	i	b	d	n	F	G	E	A	H	L	M	重量 Weight (kg)
YW-E200/E23	Ed23/5	35~70	70~130	200	200	160	145	55	80	14	10	90	165	200	515	510	140	160	40
YW-E200/E23A	Ed23/5					170	175	60	90	17		100	210						
YW-E200/E30	Ed30/5	80~160	95~155	315		160	145	55	80	14		90	165			540			49
YW-E200/E30A	Ed30/5					170	175	60	90	17		100	210			550			
YW-E200/E50	Ed50/6	100~200	150~300	500		160	145	55	80	14		90	165		580	595		195	61
YW-E200/E50A						170	175	60	90	17		100	195						63
YW-E250/E30	Ed30/5	80~160	95~155	315	250	190	180	65	90	18	12	100	200	230	565	550	140	160	65
YW-E250/E50	Ed50/6	125~250	190~380	630										225	615	595		195	68
YW-E300/E30A	Ed30/5	60~120	100~200	320	300	240	250	80	140	22	12	130	275	275	635	640	155	160	88
YW-E300/E50A	Ed50/6	200~400	200~400	800											670			195	96
YW-E300/E80A	Ed80/6	315~630	315~630	1260															102
YW-E315/E50	Ed50/6	200~400	200~400	800	315	230	220	80	125	18	12	110	245	275	670	640	155	195	95
YW-E315/E80	Ed80/6	315~630	315~630	1260															101
YW-E315/E80A						225													
YW-E400/E50	Ed50/6	160~315	160~315	630	400	280	270	100	160	22	12	140	300	340	720	750	155	195	133
YW-E400/E121	Ed121/6	630~1250	630~1250	2500											770	815	175	240	135

注：具体型号、结构外形的尺寸保留更改的权利。

Note:Our company reserves the rights to change the actual type and overall dimensions of the structure.

QW.QWZ5系列 气动鼓式制动器

QW、QWZ5 series pneumatic drum brakes

应用:气动鼓式制动器可广泛用于现场配有气源的各种起重、皮带运输、港口装卸及冶金机械中各种机构的减速和停车制动。

Application:

Pneumatic drum brakes can be extensively used for various mechanisms deceleration and stop/braking of various hoisting, belt transport, port handing, metallurgical and building machinery which are equipped with pneumatic source on site.

符合标准

Sandards compliant

■QW系列制动器连接尺寸和制动力矩参数符合JB/T6406-2006和DIN15435标准，技术要求符合JB/T6406-2006标准；QWZ5系列制动器连接尺寸和制动力矩参数符合GB6333-86标准，技术要求符合JB/T6406-2006标准；QW和QWZ5系列配套新型QG系列气缸；

■*The dimensions and braking torque parameters of QW series brakes comply with JB/T6406-2006 and DIN15435 standard, technology requirements comply with JB/T6406-2006 standard.*
The dimensions and braking torque parameters of QW25 series brakes comply with Gb6333-86 standard , technology requirements comply with JB/T6406-2006 standard.
QW and QW25 series brakes are equipped with new type QG series air cylinders.

主要特点

Main Design Features

■联锁式退距均等装置和瓦块自动随位装置，可始终保持两侧瓦块退距均等且无需调整，完全避免因退距不均使一侧制动衬垫浮贴制动轮的现象。

■主要摆动铰点均设有自润滑轴承，传动效率高，寿命长，在使用过程中无需润滑。

■制动弹簧在方管内布置并设有标尺，用户可十分方便地读出制动力矩值，免去测量和计算的麻烦。

■制动衬垫为卡装式整体成型结构，更换十分方便、快捷，备有半金属(无石棉)硬质和半硬质，软质(含石棉、无石棉)等不同材质的制动衬垫供用户选择。

■*Interlocking shoe clearance balancing device and shoe auto-aligning device constantly equalize the clearance of brake shoes on both sides and make adjustment unnecessary, completely avoiding brake lining one sidesticking to brake wheel.*

■*At main hinge points are equipped with sel-lubricating bearings, which make higher efficiency of transmission and longer performmance life, and lubricating is unnecessary during the course of operation.*

■*Brake spring is arranged inside aquare tube and surveyor's rod is placed on one side. It is easy for customers to read braking torque value and then avoid the troubles of measuring and computiing.*

■*Brake lining is of card shole piece shaping structure, which is easy and quick to replace. Brake lining of various materials such as half-metal (no asbestos) hard and half-hard, soft (include asbestos) substance are available for customer choose.*

使用条件

Operating conditions

- 环境温度：-25~+40℃
- 相对湿度：≤90%
- 工作气压：≤0.5MPa
- 适应的工作制：连续(S1)和断续(S3-60%,操作频率≤1200/h)工作制

有特殊要求，在订货时协商确定

- *Ambient temperature:-25~+40℃l*
- *Relative humidity:≤90%*
- *Operating air pressure:≤0.5MPa*
- *Operating duty:intermittent(S3-60%,≤1200/h)and continuous(S1)*

Special requirements can be discussed in order.

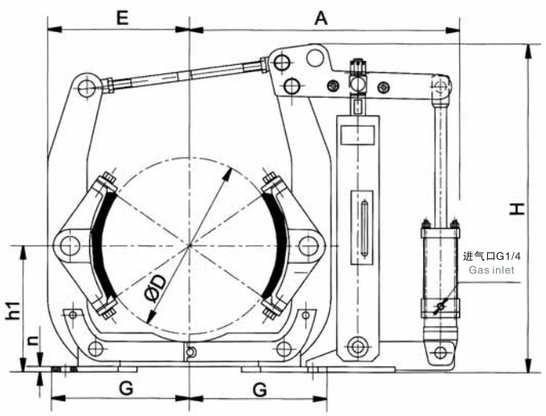

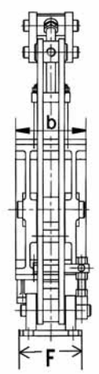

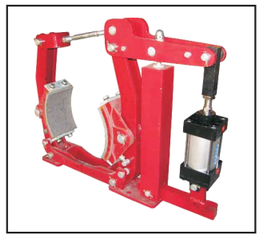

QW系列series

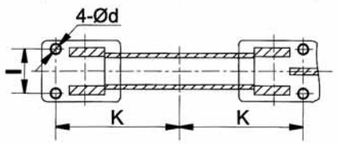

订货标记

Order Mark

QW315/40-□ □ □

- 特殊要求(可用文字说明) *Special requirement (can be specified in words)*
  - F-防腐型 *Anti-Corrosion*
- 附加装置 *Additional option*
  - K3-衬垫磨损极限限位开关 *Lining wear limit-switch*
  - M-衬垫磨损补偿装置 *Lining wear compensator*
  - S1-手动释放装置（左侧布置） *Hand release lever(left)*
  - S2-手动释放装置（右侧布置） *Hand release lever(right)*
- 制动力矩或代号 *Brake torque or code*
- 产品型号 *Type*

订货示例

Order Example

QWZ5-315/40-630-S1　　QW315/40-560-M.S2.F

QW系列鼓式制动器技术参数及安装尺寸 *Technical date and dinensions of QW series drum brakes*

制动器型号 *Brake type*	气缸型号 *Air cylinder type*	制动力矩 *Brake torque (Nm)*	安装及外形尺寸 *Dimensions (mm)*												重量 *Weight (kg)*
			D	h1	k	i	d	n	b	F	G	E	H	A	
QW160/32	QG32-50	80~160	160	132	130	55	14	8	65	85	145	140	400	380	24
QW200/32	QG32-50	140~280	200	160	145	55	14	10	80	90	165	170	500	410	26
QW250/32	QG32-50	160~315	250	190	180	65	18	12	100	110	200	205	585	505	36
QW250/40	QG40-60	250~500													36
QW315/32	QG32-50	200~400	315	230	220	80	18	12	125	115	245	260	585	535	55.5
QW315/40	QG40-60	315~630												545	56
QW315/50	QG50-60	500~1000													59.5
QW400/40	QG40-60	400~800	400	280	270	100	22	14	160	160	300	315	760	610	117
QW400/50	QG50-60	630~1250													118
QW400/63	QG63-60	1000~2000												660	121
QW500/50	QG50-60	800~1600	500	340	325	130	22	16	200	180	365	370	860	725	155
QW500/63	QG63-60	1250~2500												730	170
QW500/80	QG80-60	2000~4000													174
QW630/63	QG63-120	1600~3150	630	420	400	170	27	20	250	220	450	455	1025	830	276
QW630/80	QG80-120	2500~5000													280
QW630/100	QG100-120	3550~7100													287
QW710/80	QG80-120	2500~5000	710	470	450	190	27	22	280	240	500	520	1135	920	401
QW710/100	QG100-120	4000~8000													406
QW800/100	QG100-120	5000~10000	800	530	520	210	27	28	320	310	570	620	1360	1010	600

注：具体型号、结构外形的尺寸保留更改的权利。
Note:Our company reserves the rights to change the actual type and overall dimensions of the structure.

QWZ5系列鼓式制动器技术参数及安装尺寸 *Technical date and dinensions of QWZ5 series drum brakes*

制动器型号 *Brake type*	气缸型号 *Air cylinder type*	制动力矩 *Brake torque (Nm)*	安装及外形尺寸 *Dimensions (mm)*												重量 *Weight (kg)*
			D	h1	k	i	d	n	b	F	G	E	H	A	
QWZ5-160/32	QG32-50	80~160	160	132	130	55	14	8	65	90	145	140	400	380	24
QWZ5-200/32	QG32-50	140~280	200	160	145	55	14	8	80	90	165	170	500	410	26
QWZ5-250/32	QG32-50	160~315	250	190	180	65	18	12	100	110	200	205	585	505	36
QWZ5-250/40	QG40-60	250~500													36
QWZ5-315/32	QG32-50	200~400	315	225	220	80	18	12	125	110	245	260	585	530	55.5
QWZ5-315/40	QG40-60	315~630												555	56
QWZ5-315/50	QG50-60	500~1000													59.5
QWZ5-400/40	QG40-60	400~800	400	280	270	100	22	14	160	160	310	305	760	610	117
QWZ5-400/50	QG50-60	630~1250													118
QWZ5-400/63	QG63-60	1000~2000												660	121
QWZ5-50/-50	QG50-60	800~1600	500	335	325	130	22	16	200	180	365	390	840	725	155
QWZ5-500/63	QG63-60	1250~2500												730	170
QWZ5-500/80	QG80-60	2000~4000													174
QWZ5-630/63	QG63-120	1600~3150	630	425	400	170	27	20	250	220	450	470	1025	830	276
QWZ5-630/80	QG80-120	2500~5000													280
QWZ5-630/100	QG100-120	3550~7100													287
QWZ5-710/80	QG80-120	2500~5000	710	475	450	190	27	22	280	240	500	520	1135	920	401
QWZ5-710/100	QG100-120	4000~8000													406
QWZ5-800/100	QG100-120	5000~10000	800	530	520	210	27	28	320	280	570	620	1320	1010	600

注：具体型号、结构外形的尺寸保留更改的权利。
Note:Our company reserves the rights to change the actual type and overall dimensions of the structure.

TWZ(B)系列
脚踏式鼓式制动器
TWZ(B) series Foot Operated Drum Brakes

应用:TWZ(B)系列制动器为脚踏式人力操作的常开式制动器。主要用于各种中、小型起重机大车运行机构的减速制动。

Application:

The TWZ(B) series brake is normally opened brake, which is operated by foot. It is mainly used for deceleration braking of various middle and small cranes.

外形及安装尺寸 Outline and installation dimension

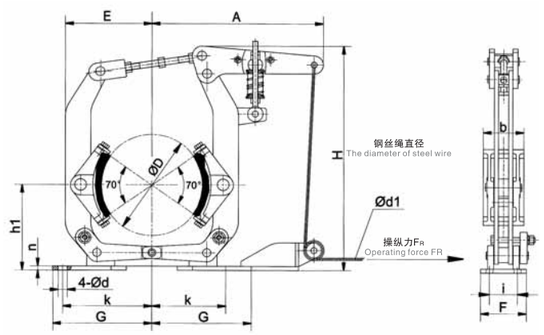

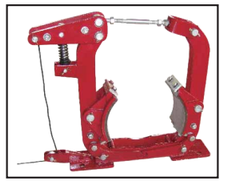

TWZ(B)系列series

订货标记 Order Mark

TWZ(B)–□–□

特殊要求(可用文字说明)
Special requirement (can be specified in words)

产品型号 *Type*

TWZ(B)系列块式制动器技术参数及安装尺寸 *Technical date and dinensions*

制动器型号 *Brake type*	最大操纵力Fa *Max.operating force*	最大制动力矩 *Max.brake torque (Nm)*	安装及外形尺寸 *Dimensions (mm)*													重 量 *Weight (kg)*
			D	h1	k	i	d	n	b	G	F	E	A	H	d1	
TWZB-200	200N	200Nm	200	160	145	55	14	8	80	165	90	170	365	470	5	23
TWZ-200				170	175	60	18		90	210	100					24
TWZ-250	400N	400Nm	250	190	180	65	18	10	100	200	100	200	415	485	5	40
TWZ-300	400N	500Nm	300	240	250	80	22	12	140	275	130	290	500	605	5	63
TWZB-315	400N	500Nm	315	230	220	80	18	12	125	245	115	290	500	605	5	62

注：具体型号、结构外形的尺寸保留更改的权利。
Note:Our company reserves the rights to change the actual type and overall dimensions of the structure.

TYW系列液压鼓式制动器
TYW series pneumatic drum brakes

应用:TYW系列液压鼓式制动器为液压驱动，卧式安装的常开式制动器，通过脚踏式液压泵进行控制只要用于中小型门座式起重机和塔式起重机的回转机构，带有手动抱闸装置，在非工作状态下，可通过其进行制动。

Application:

TYW series hydraulic drum brakes, hydraulic drive , horizontal installation of open–type brake , controlled by foot–operated hydraulic pump for small and medium as long as Crane and tower crane slewing mechanism with manual brake device in the non–working state, through its braking.

外形及安装尺寸 Outline and installation dimension

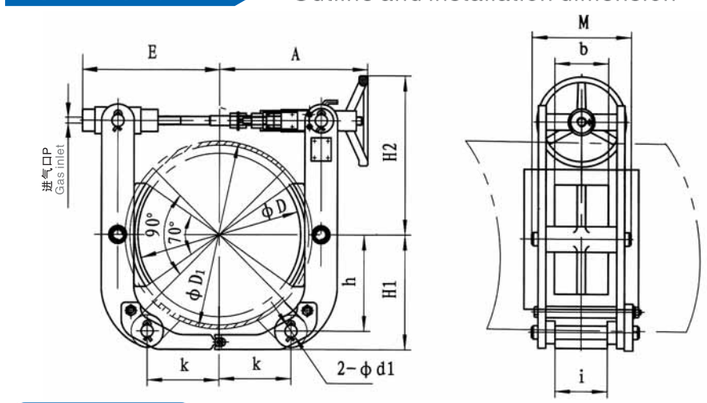

TYW系列series

订货标记 Order Mark

TYW — □– □

特殊要求(可用文字说明)
Special requirement (can be specified in words)

制动轮径 *Drum diameter*

产品型号 *Type*

TYW系列液压鼓式制动器技术参数及安装尺寸 *Technical date and dinensions*

制动器型号 *Brake type*	油压 *Hydraulic (MPa)*	额定制动力矩 *Rated braking torque*	P	D	h	K	b	i	d1	A	E	H1	H2	D1	M	重量 *Weight (kg)*
TYW-300	1–2	200–400	M10X1	300	190	135	125	100	30	330	320	235	380	380	200	40
TYW-315				315			110									42
TYW-400	2–3	600–800		400	235	177	120			365	355	280	380	470	220	50
TYW-500	2	1400		500	280	195	160	104		440	500	342	480	570	224	80

注：具体型号、结构外形的尺寸保留更改的权利。
Note:Our company reserves the rights to change the actual type and overall dimensions of the structure.

TYWZ2系列脚踏液压鼓式制动器

TYWZ2 series Foot Operated Drum Brakes

应用:TYWZ2系列脚踏液压鼓式制动器主要用于中、小型起重机大车运行的平稳减速制动，是一种常开式制动器，为操作人员提供了一种平稳放慢和减速制动的方法。

Application:

TYWZ2 series hydraulic drum brake pedal is mainly used for small, medium and Crane run steady deceleration , is a normally open brake , the operator provides a slow and steady method of deceleration .

符合标准

Sandards compliant

◆该系列制动器符合符合JB/ZQ4388-86标准。

◆*In accordance with JB/ZQ4388-86 standard.*

主要特点

Main Design Features

◆常开式安装

◆制动平稳、定位准确

◆无需电源

◆ *Normally open installation.*

◆ *Brake stable,accurate positioning.*

◆ *Without power supply.*

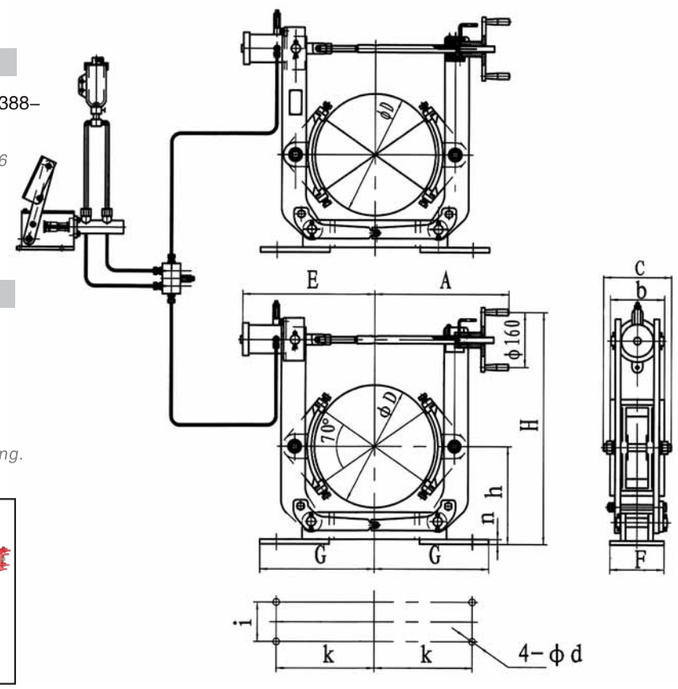

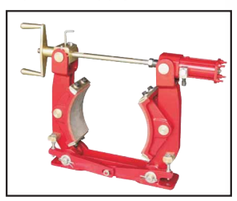

TYWZ2系列 series

TYWZ2系列鼓式制动器技术参数及安装尺寸 *Technical date and dinensions*

制动器型号 Brake type	制动力矩 Braking torque (Nm)	安装及外形尺寸 Dimensions (mm)													重量 Weight (kg)
		D	h	k	i	d	n	b	C	G	F	E	A	H	
TYWZ2-200	0-200	200	170	175	60	17	10	90	135	195	100	300	320	440	42
TYWZ2-300	0-400	300	240	250	80	22	12	140	160	275	130	360	380	610	56
TYWZ2-315	0-400	315	240	250	80	22	12	125	186	275	130	375	390	610	60
TYWZ2-400	0-800	400	320	325	130	22	14	180	210	380	180	445	445	780	84

注：具体型号、结构外形的尺寸保留更改的权利。

Note:Our company reserves the rights to change the actual type and overall dimensions of the structure.

TJ2系列电磁鼓式制动器

TJ2 series electromagnetic drum brakes

使用条件

Operating conditions

●环境温度：-25~+40℃

●相对湿度：≤90%

●电源：交流380V，50Hz

●使用地点海拔高度不超过2000m.

●制动器周围不得有易燃易爆及足以腐蚀金属和破坏绝缘的气体和导电尘埃.

●*Ambient temperature:-25~+40℃l*

●*Relative humidity:≤90%*

●*Power:AC380V,50Hz*

●*Sea level altitude for application should not exceed 2000m.*

●*At places free of combustible and explosive hazard,free of electro conductive dust,free of gaseous medium that might be corrosive to metals and destructive to insulators*

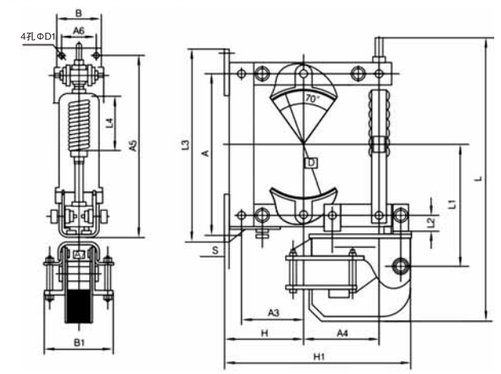

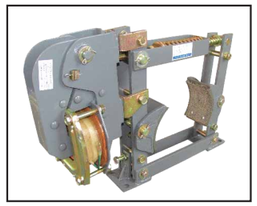

TJ2系列 series

订货标记

Order Mark

TJ2 -□-□

匹配电磁铁型号 *Adapted Electro Magnet Type*

制动轮直径(mm) *Drum Diameter(mm)*

产品型号 *Type*

TJ2系列鼓式制动器技术参数及安装尺寸 *Technical data and dimensions*

制动器型号 Brake type	制动力矩 Brakes torque (Nm)		闸瓦退距 Back away from the brake shoe		调整杆行程 Lever stroke		电磁铁型号 Electromagnet type	电磁铁转矩 Electromagnet torque	
	JC=25%和40%	JC=100%	正常 Normal	最大 Maximum	开始 Start	最大 Maximum		JC=25%和40%	JC=100%
TJ2-100	20	10	0.4	0.6	2	3	MZD1-100	5.5	3
TJ2-200	160	80	0.5	0.8	2.5	3.8	MZD1-200	40	20
TJ2-300	500	200	0.7	1.0	3	4.4	MZD1-300	100	40

制动器型号 Brake type	制动闸瓦宽 Brake shoe width	制动轮直径 Drum Diameter	安装及外形尺寸 Dimensions (mm)																		
			L	L1	L2	L3	L4	B	B1	H	H1	S	D1	A	A1	A2	A3	A4	A5	A6	A7
TJ2-100	70	100	375	230	32	260	40	70	128	100	245	5	13	160	63	27	70	100	230	40	3
TJ2-200	90	200	628	398	50	420	88	90	176	170	412	7	17	285	95	40	129	175	380	60	38
TJ2-300	140	300	825	519	62	580	157	120	235	240	566	9	21	415	155	46	190	240	540	80	54

注：具体型号、结构外形的尺寸保留更改的权利。

Note:Our company reserves the rights to change the actual type and overall dimensions of the structure.

MW(Z) 系列电磁鼓式制动器

MW(Z) Series Electromagnetic drum brakes

符合标准

Sandards compliant

- 该系列制动器符合JB/T7658-1995标准。
- *In accordance with JB/T7685-1995 standard.*

主要特点

Main Design Features

- 使用安全可靠。
- 动作频率高，节能。
- 绿色环保，无石棉衬垫。
- 制动平稳，无噪音。

- *Safe and reliable operation.*
- *High frequency of action and energy saving.*
- *Asbestos free brake linings friendly to environment.*
- *Smooth braking and noiseless running.*

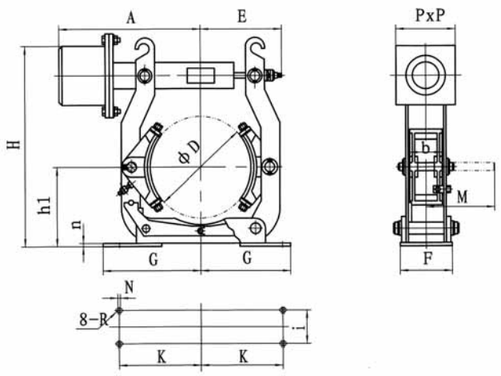

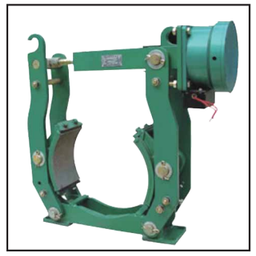

MW(Z)系列series

订货标记

Order Mark

MW(Z)□-□-□

- 特殊要求(可用文字说明) *Special requirement (can be specified in words)*
- 制动力矩 *Brake torque*
- 制动轮直径(mm) *Drum Diameter(mm)*
- 加“Z”为直流 *Add “Z” ,means dc*
- 产品型号 *Type*

订货示例

Order Example

MW315-630　　MWZ400-1250

使用条件

Operating conditions

- 环境温度：-25~+40℃
- 相对湿度：≤90%
- 电源：交流380V，50Hz
  MWZ产品为直流、额定电压220V
- 使用地点海拔高度不超过1000m.
- 制动器周围不得有易燃易爆及足以腐蚀金属和破坏绝缘的气体 和导电尘埃.

- *Ambient temperature:-25~+40℃l*
- *Relative humidity:≤90%*
- *Power:AC380V,50Hz*
  The MWZ products are of DC power 220 V rated vollage.
- *Sea level altltude for application should not exceed 1000m.*
- *At places free of combustible and explosive hazard,free of electro conductive dust,free of gaseous medium that might be corrosive to metals and destructive to insulators.*

MWZ 系列鼓式制动器技术参数及安装尺寸 *Technical date and dinensions*

技术参数 Technical / 型号 Type	制动力矩 Brakes torque (Nm)	退 矩 Back moments (mm)	配用电磁铁 Adapted magnet								总重量 The total weight (kg)
			型号 Type	额定吸力 Rated Suction(N)		最大行程/初行程 Stroke / beginning of trip(mm)	额定电流 Rated current(A)		重 量 Weight (kg)		
				通电持续率25% Sustained rate of 25% power	通电持续率40% Sustained rate of 25% power		通电持续率25% Sustained rate of 25% power	通电持续率40% Sustained rate of 25% power			
MW160-80	80	0.5	DTZ-160	1000	800	3	1.3	0.8	15		27.8
MW 200-160	160	0.6	DTZ-200	1000	800	3	1.3	0.8	15		34
MW315-630	630	0.6	DTZ-315	2800	1800	3.5	23	1.4	33		110
MW160-80	80	0.5	DT-160	通电持续率 On-load factor	额定吸力 Rated Suction(N)	6/3	工作频率 Operating frequency (C/h)	电流 Current(A) 起动 Start	电流 Current(A) 工作 Work	3.5	17
				100%	1000		1200	2.0	0.02		
MW 200-160	160	0.6	DT-200	100%	1000	6/3	1200	2.0	0.02	5	30
MW250-315	315	0.6	DT-250	100%	2800	7/3.5	1200	2.5	0.02	7	42
MW 315-630	630	0.8	DT-315	100%	2800	7/3.5	900	3	0.025	12	90
MW400-1250	1250	0.8	DT-400	100%	5000	8/4	900	3	0.03	17	158
MW500-2500	2500	1.0	DT-500	100%	5000	8/4	600	4.5	0.035	36	204
MW630-5000	5000	1.0	DT-630	100%	10000	9/5	600	8	0.06	65	355
MW710-8000	8000	1.25	DT-710	100%	15000	10/6	600	11	0.08	100	419
MW800-10000	10000	1.25	DT-800	100%	18000	11/6	600	14	0.15	135	685

制动器型号 Brake type	A	b	D	E	F	G	G1	H	h1	i	K	M	P	N	n	R
MW160-80	240	65	160	165	85	145	65	341	132	55	130	149	132	5	8	7
MW 200-160	270	70	200	210	90	165	75	390	160	55	145	165	132	6	10	7
MW250-315	330	90	250	246	100	200	100	518	190	65	180	207	167	10	12	9
MW315-630	369	110	315	306	115	245	135	626	230	80	220	228	167	10	14	9
MW400-1250	470	140	400	380	160	310	150	764	280	100	270	284	243	12	14	11
MW500-2500	560	180	500	440	180	365	185	895	340	130	325	343	243	12	21	11
MW630-5000	650	225	630	460	220	450	280	1020	420	170	400	422	271	15	20	13.5
MW710-8000	775	255	710	535	240	500	300	1135	470	190	450	447	350	15	25	13.5
MW800-10000	835	264	800	660	280	570	300	1315	530	210	520	410	400	15	28	13.5
MWZ160-80	240	65	160	165	85	145	65	341	132	55	130	149	132	5	8	7
MWZ200-160	270	70	200	210	90	165	75	390	160	55	145	165	132	6	10	7
MWZ315-630	369	110	315	306	115	245	135	626	230	80	220	228	167	10	14	9

注：配用电磁铁变更不另行通知，大规格电磁铁配用电器盒较大，须另外放置。
具体型号、结构外形的尺寸保留更改的权利。

Note: Change of adapted magnet wilt not be informed otherwise. Big sized magnet is adapted with larger electrical control box, which must be placed alternatively.
Our company reserves the rights to change the actual type and overall dimensions of the structure.

JZ 系列电磁鼓式制动器

JZ Series Electromagnetic drum brakes

符合标准

Sandards compliant

- 该系列制动器符合JB/ZQ4388-86标准。
- *In accordance with JB/ZQ4388-86 standard.*

主要特点

Main Design Features

- 使用安全可靠。
- 动作频率高，节能。
- 绿色环保，无石棉衬垫。
- 制动平稳，无噪音。

- *Safe and reliable operation.*
- *High frequency of action and energy saving.*
- *Asbestos free brake linings friendly to environment.*
- *Smooth braking and noiseless running.*

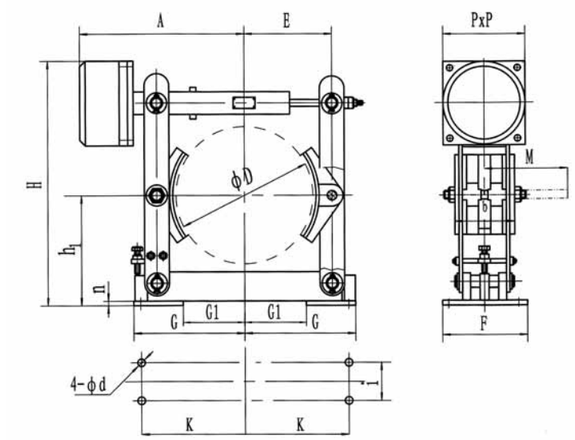

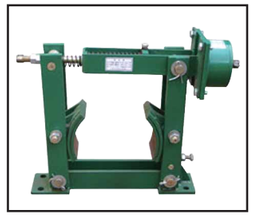

JZ系列 series

订货标记

Order Mark

JZ –□–□

- 特殊要求(可用文字说明) *Special requirement (can be specified in words)*
- 制动轮直径(mm) *Drum Diameter(mm)*
- 产品型号 *Type*

订货示例

Order Example

JZ–200

使用条件

Operating conditions

- 环境温度：–25~+40℃
- 相对湿度：≤90%
- 电源：交流380V，50Hz
- 使用地点海拔高度不超过1000m.
- 制动器周围不得有易燃易爆及足以腐蚀金属和破坏绝缘的气体和导电尘埃.

- *Ambient temperature:–25~+40℃l*
- *Relative humidity:≤90%*
- *Power:AC380V,50Hz*
- *Sea level altitude for application should not exceed 1000m.*
- *At places free of combustible and explosive hazard,free of electro conductive dust,free of gaseous medium that might be corrosive to metals and destructive to insulators.*

JZ 系列鼓式制动器技术参数及安装尺寸 *Technical date and dimensions*

制动器型号 *Brake type*	制动轮直径 *Drum Diameter (mm)*	制动力矩 *Brakes torque (Nm)*	制动瓦退矩 *Brakes shoe clearance (max)(mm)*	配用电磁铁 *Adapted magnet*							重 量 *Weight (kg)*
				电磁铁型号 *Electromagnet type*	额定吸力 *Rated Suction(N)*	行程 *Stroke(mm)*		通电持续率 *On-load factor*	电流 *Current(A)*		
						最大 *Initial*	初始 *Max*		起动 *Start*	保持 *Hold*	
JZ-100	100	40	0.5	DT-100	1000	6	3	0-100%	2	0.02	16
JZ-200	200	160	0.6	DT-200	1000	6	3	0-100%	2	0.02	26
JZ-300	300	500	0.8	DT-315	2800	7	3.5	0-100%	3	0.025	64
JZ-400	400	1250	0.8	DT-400	5000	8	4	0-100%	3.5	0.03	117
JZ-500	500	2500	0.8	DT-500	8000	8	4	0-100%	4.5	0.035	200
JZ-600	600	5000	1.0	DT-600	10000	9	5	0-100%	8	0.06	417

安装及外形尺寸 *Dimensions (mm)*

制动器型号 *Brake type*	A	b	D	d	E	F	G	H	h1	i	K	M	P	n
JZ-100	230	70	100	13	165	75	125	300	100	40	110	145	132	6
JZ-200	290	80	200	17	215	100	208	435	170	60	175	126	132	8
JZ-300	385	140	300	22	295	130	290	600	240	80	250	160	167	10
JZ-400	505	180	400	22	350	180	350	782	320	130	325	210	243	12
JZ-500	577	200	500	22	490	200	405	950	400	150	380	250	243	16
JZ-600	675	240	600	26	560	220	500	1160	475	170	475	305	271	18

注：配用电磁铁变更不另行通知，大规格电磁铁配用电器盒较大，须另外放置。
具体型号、结构外形的尺寸保留更改的权利。

Note: Change of adapted magnet wilt not be informed otherwise. Big sized magnet is adapted with larger electrical control box, which must be placed alternatively.
Our company reserves the rights to change the actual type and overall dimensions of the structure.

ZWZA.ZWZB系列
直流电磁鼓式制动器
ZWZA.ZWZB series DC electromagnetic brake drum

应用：直流电磁鼓式制动器主要用于电磁及各种直流驱动或直流电网的起重、港口装卸及冶金机械中各种机构的减速和停车制动。对于交流驱动的各种起重、港口装卸及冶金机械不推荐使用。

Application:

Electromagnetic drum brakes can be extensively used for decelerarion and stopping of electromagnetic litter and various lift, beit transport, port handling, metallurgical and building machinery using DC drive or DC net. And not suitable for machines using AC drive.

符合标准
Sandards compliant

▲ZWZA系列制动器连接尺寸和制动力矩参数符合JB/ZQ4386-86，技术要求符合JB/T7685-2006标准。本系列主要用来取代原有的ZWZ系列老产品。

▲ZWZB系列制动器连接尺寸和制动力矩参数符合GB6334-86标准。技术要求符合JB/T7685-2006标准。本系列主要用来取代原有的ZWZ3、ZWZ3A系列老产品。

▲The dimensions and braking torque parameters of ZWZA series brakes comply with JE/ZQ4386-86 slandard, technology requirements comply with JB/T7685-2006 standard; this series brakes is mainly used for taking replace of old products of ZWZ series.

▲The dimensions and braking torque parameters of ZWZB series brakes comply with Gb6334-86 standard, technology requirements comply with JB/T7685-2006 standard; this series brakes is mainly used for taking replace of old products of ZWZ3、ZWZ3A series.

主要特点
Main Design Features

◆联锁式退距均等装置和瓦块自动随位装置，可始终保持两侧瓦块退距均等且无需调整，完全避免因退距不均使一侧制动衬垫浮贴制动轮的现象。

◆主要摆动铰点均设有自润滑轴承，传动效率高，寿命长，在使用过程中无需润滑。

◆制动弹簧在方管内布置并设有标尺，用户可十分方便地读出制动力矩值，免去测量和计算的麻烦。

◆制动衬垫为卡装式整体成型结构，更换十分方便、快捷，备有半金属(无石棉)硬质和半硬质，软质(含石棉、无石棉)等不同材质的制动衬垫供用户选择。

◆Intedccking shoe clearance balancing device and shoe auto-aligning device constantly equalize the clearance of brake shoes on bolh sides and make adjustment unnecessary, completely avoiding brake lining one side sticking to brake wheel.

◆At main hinge points are equipped with self-lubricating beatings, which make higher efficiency of transmission and longer performance life, and lubricating is unnecessary during the course of operation.

◆ Brake spring is arranged inside square tube and surveyor's rod is placed on one side. It is easy for customers to read braking torque value and then avoid the troubles of measuring and computing.

◆Brake lining is of card whole piece shaping struclure, which is easy and quick to replace. Brake lining of various materials such as half-metal (non-asbestos) hard and half-hard, sort (include asbestos) substance are available for customer to choose.

订货标记
Order Mark

ZWZA□–□□□□
ZWZB□/□□□□

- 特殊要求(可用文字说明) *Special requirement (can be specified in words)*
- 接电持续率或电流值（串联） *JC or current value(series connection)*
- B:线圈并联 *Shunt coil*
  C:线圈串联 *Series coil*
- 制动力矩（ZWZA） *Brake torque*
  电磁铁代号（ZWZB） *Electromagnet code*
- 制动轮径 *Drum diameter*
- 产品型号 *Type*

订货示例
Order Example

ZWZA500–2500B 25% CP　　ZWZB500/500B 40% CP

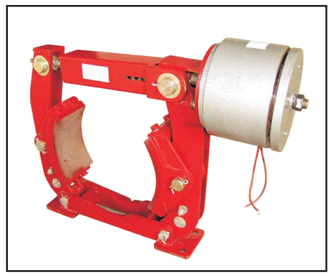

ZWZA、ZWZB系列 series

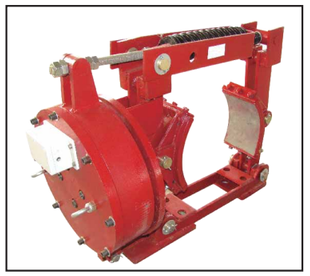

ZWZA、ZWZB系列 series

外形及安装尺寸 Outline and installation dimension

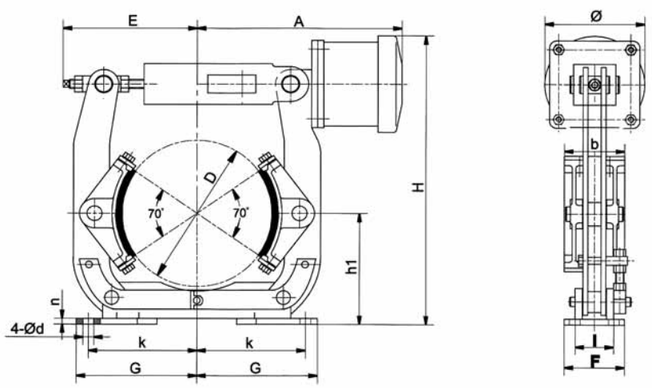

ZWZA、ZWZB系列电磁鼓式制动器主要技术参数 *Main technology parameters of ZWZA,ZWZB series brakes*

制动器型号 Brake type	电磁铁型号 Electromagnet type	制动力矩 Brake torque (Nm)		制动瓦退矩 Brake shoe clearance (max)(mm)
		JC 25% 线圈并联 Shunt coil	JC 40% 线圈并联 Shunt coil	
ZWZA200-40	MZZ1-100	40	32	1
ZWZA200-160	MZZ1-200	160	128	
ZWZA300-250	MZZ1-200	250	200	1.25
ZWZA300-500	MZZ1-300	500	430	
ZWZB-160/100	MZZ1-100	35.5	28	1
ZWZB-160/200	MZZ1-200	140	112	
ZWZB-200/100	MZZ1-100	40	31.5	
ZWZB-200/200	MZZ1-200	160	125	
ZWZB-200/300	MZZ1-300	315	280	
ZWZB-250/200	MZZ1-200	200	160	1.25
ZWZB-250/300	MZZ1-300	450	355	
ZWZB-315/200	MZZ1-200	250	200	
ZWZB-315/300	MZZ1-300	500	450	

ZWZA、ZWZB系列电磁鼓式制动器安装尺寸 *Main technology parameters of ZWZA,ZWZB series brakes*

制动器型号 Brake type	安装及外形尺寸 Dimensions (mm)													重量 Weight (kg)
	D	h1	k	i	d	n	b	F	G	E	H	A	O	
ZWZA200-40	200	170	190	60	17	8	90	100	210	205	404	310	118	32
ZWZA200-160											429	340	168	65
ZWZA300-250	300	240	270	80	21	10	120	130	290	260	564	415	168	68
ZWZA300-500											590	465	220	105
ZWZB-160/100	160	132	130	55	14	6	65	90	150	140	403	259	115	32
ZWZB-160/200											421	306	168	38
ZWZB-200/100	200	160	145	55	14	8	80	90	165	170	442	299	115	60
ZWZB-200/200											461	346	168	65
ZWZB-200/300											490	390	220	70
ZWZB-250/200	250	190	180	65	18	10	100	100	200	205	526	350	168	72
ZWZB-250/300											555	380	220	78
ZWZB-315/200	315	225	220	80	18	10	125	110	245	260	601	376	168	86
ZWZB-315/300											630	406	220	105

注：具体型号、结构外形的尺寸保留更改的权利。
Note:Our company reserves the rights to change the actual type and overall dimensions of the structure.

使用条件 Operating conditions

- 环境温度：-5~+40℃
- 相对湿度：≤90%
- 适应的工作制：连续(S1-100%)和断续(S3-25%,40%,60%,操作频率≤720/h)工作制
- 电流：直流110V,220V
  有特殊要求，在订货时协商确定

- *Ambient temperature:-5~+40℃l*
- *Relative humidity:≤90%*
- *Operating duty:intermittent(S3-25%,40%,60%,≤720/h) and continuous(S1-100%)*
- *Power:DC110V,220V,440V*
  Special requirements can be discussed in order.

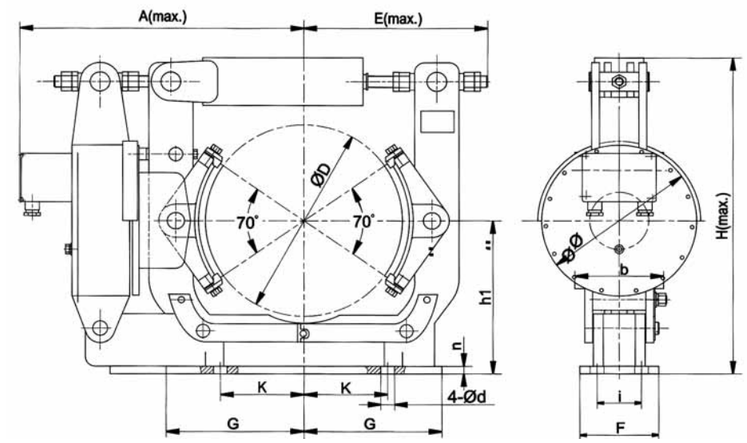

ZWZA、ZWZB系列电磁鼓式制动器安装尺寸 *Main technology parameters of ZWZA,ZWZB series brakes*

制动器型号 Brake type	安装及外形尺寸 Dimensions (mm)													重量 Weight (kg)
	D	h1	k	i	d	n	b	F	G	E	H	A	Ø	
ZWZA400-□	400	320	170	90	28	16	180	160	280	375	700	580	330	175
ZWZA500-□	500	400	205	100	28	20	200	190	320	385	850	650	410	300
ZWZA600-□	600	475	250	126	40	28	240	220	385	465	960	750	480	430
ZWZA700-□	700	550	305	150	40	34	280	270	440	517	1220	710	560	677
ZWZA800-□	800	600	350	180	40	34	320	300	490	595	1340	810	640	1040
ZWZB-400/400	400	280	270	100	22	16	160	140	300	375	700	590	330	175
ZWZB-400/500												580	410	203
ZWZB-500/400	500	335	325	130	22	20	200	180	365	385	800	640	330	292
ZWZB-500/500												650	410	300
ZWZB-500/600												655	480	334
ZWZB-630/500	630	425	400	170	27	28	250	220	450	465	1030	720	410	377
ZWZB-630/600												740	480	423
ZWZB-630/700												750	560	509
ZWZB-710/600	710	475	450	190	27	34	280	240	500	517	1220	780	480	605
ZWZB-710/700												815	560	625
ZWZB-710/800												830	640	633
ZWZB-800/700	800	530	520	210	27	34	320	280	570	595	1340	890	560	1020
ZWZB-800/800												905	640	1040

注：具体型号、结构外形的尺寸保留更改的权利。
Note:Our company reserves the rights to change the actual type and overall dimensions of the structure.

ZWZA、ZWZB系列电磁鼓式制动器技术参数 *Technical data of ZWZA,ZWZB series brakes*

制动器型号 *Brake type*	线圈型号 *Coil type*	制动力矩 *Brake torque (Nm)*							瓦块退矩 *Brake shoe clearance (Max) (mm)*
		线圈并联 *Shunt coil*			线圈串联 *Series coil*				
		通电持续率 JC			60%额定电流 *60% rated current*		40%额定电流 *40% rated current*		
					通电持续率 JC				
		25%	40%	100%	25%	40%	25%	40%	
ZWZA400-□	ZWZ-400	1500	1200	550	1500	1200	900	550	1.5
ZWZA500-□	ZWZ-500	2500	1900	850	2500	1900	1500	1000	1.75
ZWZA600-□	ZWZ-600	5000	3550	1550	5000	3550	3000	2050	2.0
ZWZA700-□	ZWZ-700	8000	5750	2800	8000	5750	4800	3250	2.25
ZWZA800-□	ZWZ-800	12500	9100	4400	12500	9100	7500	5550	2.5
ZWZB-400/400	ZWZ-400	1250	1000	500	1250	1000	800	500	1.5
ZWZB-400/500	ZWZ-500	2000	1400	630	2000	1400	1250	710	1.75
ZWZB-500/400	ZWZ-400	1250	1000	450	1250	1000	800	450	1.5
ZWZB-500/500	ZWZ-500	2000	1600	710	2000	1600	1250	800	1.75
ZWZB-500/600	ZWZ-600	3550	3150	1400	3550	3150	2500	1800	2.0
ZWZB-630/500	ZWZ-500	2240	1800	800	2240	1800	1400	800	1.75
ZWZB-630/600	ZWZ-600	5000	3550	1600	5000	3550	2800	2000	2.0
ZWZB-630/700	ZWZ-700	6300	4500	2240	6300	4500	4000	2500	2.25
ZWZB-710/600	ZWZ-600	5000	3550	1600	5000	3550	2800	2000	2.0
ZWZB-710/700	ZWZ-700	7100	5000	2240	7100	5000	4000	2800	2.25
ZWZB-710/800	ZWZ-800	10000	7100	3550	10000	7100	5600	4000	2.5
ZWZB-800/700	ZWZ-700	7100	5000	2500	7100	5000	4500	2800	2.25
ZWZB-800/800	ZWZ-800	10000	8000	3550	10000	8000	6300	4000	2.5

注：具体型号、结构外形的尺寸保留更改的权利。
Note:Our company reserves the rights to change the actual type and overall dimensions of the structure.

制动器线圈 Brake Coil

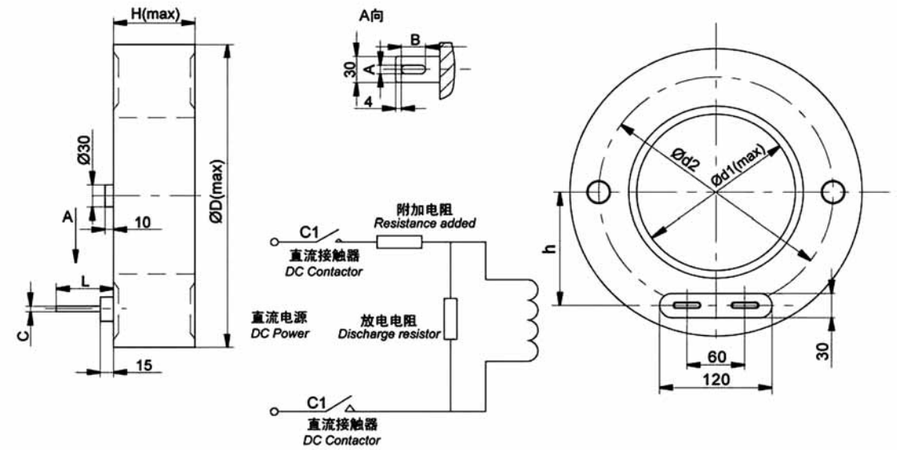

线圈尺寸 *Coil Dimensions*

型 号 *Type*	A	B	C	L	h	H	d1	d2	D
ZWZ-400B(C)	9	17	1.5	90	105	94	161	230	287
ZWZ-500B(CⅡ、Ⅲ)	9	17	1.5	95	125	86	186	300	366
ZWZ-600B(CⅡ、Ⅲ)	9	17	1.5	100	158	88	221	360	428
ZWZ-700B(CⅡ)	9	17	1.5	110	188	88	256	435	502
ZWZ-800B	9	17	1.5	125	220	88	311	500	572
ZWZ-500CⅣ	13	17	1.5	95	其余尺寸与并联线圈相同 *Other dimensions are the same to shunt colis.*				
ZWZ-600CⅣ	13	17	1.5	100					
ZWZ-600CⅤ	13	17	3	100					
ZWZ-700CⅢ	13	17	3	110					
ZWZ-700CⅣ	13	42	4.5	140					
ZWZ-800CⅡ	13	17	3	125					
ZWZ-800CⅢ	13	42	6	155					

注：具体型号、结构外形的尺寸保留更改的权利。
Note:Our company reserves the rights to change the actual type and overall dimensions of the structure.

订货标记 Order Mark

ZWZ-□ □□

- 线圈代号(并联线圈不标) *Coil No. (Shunt coils unnececssary)*
- B:线圈并联 *Shunt coil* C:线圈串联 *Series coil*
- 线圈型号 *Coil type*

订货示例 Order Example

ZWZ-600B ZWZ-700CⅢ ZWZ-500CⅡ ZWZ-500B

线圈技术参数 *Coil technical data*

参数 Parameters / 串联线圈型号 Series coil type		ZWZ-400						ZWZ-500		
		II	III	IV	V	VI	VII	II	III	IV
额定电流 Rated current (A)	JC 15%	96.5	139	192	231	268	346	201	316	495
	JC 25%	75	108	149	179	208	268	156	245	383
	JC 40%	59	85.5	118	141	164	212	123	193	302
20℃电阻 Resistance(Ω)		0.089	0.043	0.025	0.0174	0.0128	0.0078	0.0285	0.0115	0.0074
重 量 Weight (kg)		18	16.5	14.5	15.5	16.5	17.5	28	30	30

参数 Parameters / 串联线圈型号 Series coil type		ZWZ-600					ZWZ-700	ZWZ-800		
		II	III	IV	V	VI	VII	II	III	IV
额定电流 Rated current (A)	JC 15%	209	300	510	630	302	715	1175	595	1355
	JC 25%	162	233	395	490	234	555	910	460	1050
	JC 40%	128	184	312	387	185	438	720	363	830
20℃电阻 Resistance(Ω)		0.0394	0.019	0.0065	0.0043	0.023	0.0041	0.0015	0.0075	0.0014
重 量 Weight (kg)		38.4	41.6	42	43.6	58.5	61	63.5	75	77

并联线圈型号 Shunt coil type		ZWZ-400			ZWZ-500			ZWZ-600		
参数 Parameters / 电压和负载因数 Voltage and on-load factor		常温电阻 Resistance at normal temperature 20℃(Ω)	附加电阻 Resistance added (Ω)	功 率 Power (W)	常温电阻 Resistance at normal temperature 20℃(Ω)	附加电阻 Resistance added (Ω)	功 率 Power (W)	常温电阻 Resistance at normal temperature 20℃(Ω)	附加电阻 Resistance added (Ω)	功 率 Power (W)
110V	25%	14.15		900	12.6		1010	9.6		1330
	40%		6	630		5	725		4	940
	100%		20	870		18	415		14	540
220V	25%		20	1500		18	1700		14	2160
	40%		32	1100		29	1230		22	1610
	100%		63	660		54	765		42	990
220V (不带附加电阻) No resistance added (Ω)	25%	53		920	48		1010	39.5		1225
	40%	91		540	98		500	56		865

并联线圈型号 Shunt coil type		ZWZ-700			ZWZ-800			并联线圈重量 Shunt coil weight(kg)	
参数 Parameters / 电压和负载因数 Voltage and on-load factor		常温电阻 Resistance at normal temperature 20℃(Ω)	附加电阻 Resistance added (Ω)	功 率 Power (W)	常温电阻 Resistance at normal temperature 20℃(Ω)	附加电阻 Resistance added (Ω)	功 率 Power (W)	型号 Type	重 量 Weight (kg)
								ZWZ-400	16
110V	25%	6.85		1850	5.2		2400	ZWZ-500	27
	40%		2.5	1370		2	1740	ZWZ-600	38.5
	100%		9.4	800		7.3	1010	ZWZ-700	52
220V	25%		9.4	3200		7.7	3920	ZWZ-800	81
	40%		15	2400		12	3930		
	100%		29	1420		24	1710		
220V (不带附加电阻) No resistance added (Ω)	25%				16		3025		
	40%	46		1055	28		1730		

注：①JC代表接电持续率。

②表中所列功率指在额定电压下冷态线圈及附加电阻消耗的功率。

Note:①JC means on-load factor.

②The power listed in the table is consumption power of coil(in the cool state) and added resistance at rated voltage.

具体型号、结构外形的尺寸保留更改的权利。

Our company reserves the rights to change the actual type and overall dimensions of the structure.

盘式制动器 DISC BRAKES

一、电力液压盘式制动器 *Electro-hydraulic disc brakes*

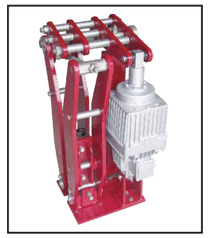

YPZ2Ⅰ.Ⅱ.Ⅲ系列 *Series*

YPZ2Ⅳ.Ⅴ.Ⅵ系列 *Series*

二、钳盘式制动器 *Caliper disc brake*

QP系列 *Series*

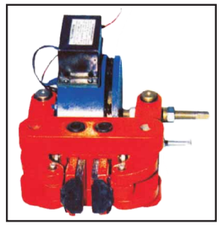

DCPZ系列 *Series*

三、液压安全制动器 *Hydraulic safety brake*

SB系列 *Series*

SBD□-A系列 *Series*

SBD□-B系列 *Series*

SBD□-C系列 *Series*

四、失效保护制动器 *Fail-safe brakes*

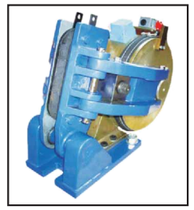

SE系列 *Series*

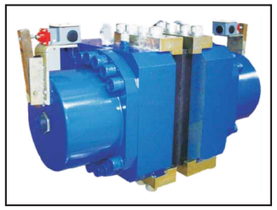

SH系列 *Series*

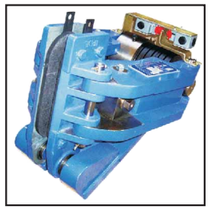

SH系列 *Series*

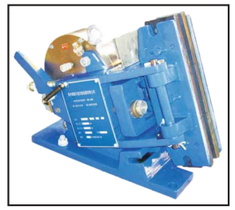

SP系列 *Series*

五、其它系列 *Other series*

DJPZ系列 *Series*

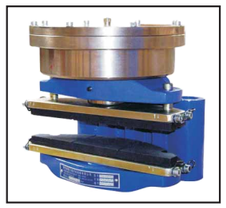

ADP系列 *Series*

YPZ2系列
电力液压盘式制动器
YPZ2 series electro-hydraulic disc brake

应用：YPZ2系列电力液压盘式制动器是一种高性能、多功能的先进产品，由于其具有瓦块退距自动均等，衬垫磨损自动补偿等先进功能，使用过程中维护非常便捷。通过增设各种限位开关，可给主机PLC提供所需的联锁保护信号。非常适合各种现代的大型专用装卸机械、起重运输机械、冶金设备、矿山设备及工程机械中各种机构的减速和维持(停车)制动。

Application:

YPZ2 Series Electro-hydraulic Disc Brakes ara advanced products with high performance and multiple functions.They are maintenance-friendly due to advanced functions applied on them such as automatic shoe clearance balancing and wear-self-compensation device. Various limit switches can provide interlocking protection signal to main machinery PLC. They fit very well for decelerating and stop/braking large-scale modem machines such as loading and unloading machinery, lifting and transporting machinery, metallurgy equipment and mining equipment.

主要特点
Main Design Features

■联锁退距均等装置和瓦块自动随位装置，使用过程中可始终保持两侧瓦块退距均等且无需调整完全避免制动衬垫浮贴制动盘的现象。

■主要摆动铰点均设有自润滑轴承，使用过程中无需润滑；传动效率高，动作灵敏，制动器闭合(上闸)时间为0.25~0.4S。

■无级衬垫摩损自动补偿装置，可使瓦块退距和制动力矩在使用过程中保持恒定，免去经常调整的麻烦。

■力矩可调内置式弹簧，设有力矩标尺和防磨损衬垫。

■制动衬垫为插装式，更换便捷。提供半金属、粉末冶金等多种材质衬垫供用户选配。

■配套本公司新型推动器、动作灵敏、寿命长。

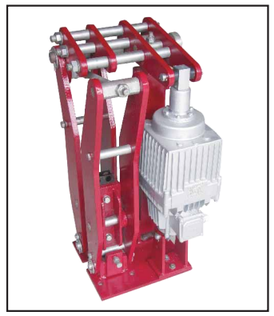

YPZ2Ⅰ.Ⅱ.Ⅲ系列 *Series*

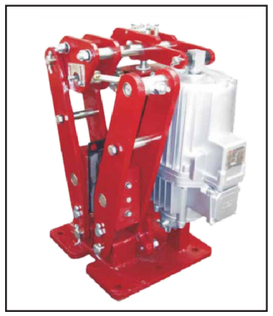

YPZ2Ⅳ.Ⅴ.Ⅵ系列 *Series*

■*Interlocking shoes clearance balancing device and shoe auto-aligning device, constantly equalize the clearance of brake shoes on both sides and no need to adjust, thus completely avoid one side of brake Lining sticking to brake disc.*

■*Self-lubricating bearings are equipped at main hinge points, which bring high efficiency of transmission, long performance life and unnecessary to lubricate during the course of operation. The closing time is short (only 0.25-0.4s).*

■*Wear-self-compensation devices can realize self-compensation of shoes clearance and relatively constant brake torque It avoids the trouble of adjusting.*

■*Torque adjustable built-in springs with torque scale and anti-wear linings.*

■*Brake linings are plug-in style, which are easy to replace. Brake linings of various materials such as power metallurgy and semimetals (non-asbestos), which ara available for customers to choose.*

■*Equipped with our new thrusters: Swift reaction and having long life-span.*

附加装置
Options

●手动释放装置

●释放(开闸)限位开关，可实现制动器是否正常释放的信号显示或连锁保护。

●衬垫磨损极限限位开关，可实现衬垫磨损到极限时，自动显示信号或进行连锁保护。

●采用带下降延时推动器驱动，可实现制动器的延时闭合。

● *Manual release levers.*

● *Release limit switches which can indicate signals such as whether brake is properly released or provide interlocking protection.*

● *Lining wear limit switches can automatically indicate alarm signal or provide interlocking protection when wear of brake lining is reaching the limit.*

● *Adopt thrusters with fall delay system; This can realize delay closing of brake.*

订货标记
Order Mark

YPZ2-□×□□/□-□-□-□

- 电源电压等级和电源频率 *Power voltage and power frequency*
- 制动器安装形式，左式时不标，右式标注。 *Installation form , left hand and right hand .*
- S1-手动释放装置 *Hand release lever*
- M-衬垫磨损补偿装置 *Lining wear compensator*
- K3-衬垫磨损极限限位开关 *Lining wear limit-switch*
- K1-开闸限位开关 *Release limit-switch*
- K2-闭闸限位开关 *Close limit-switch*
- 推动器规格（推力） *Thruster specifications (thrust)*
- 制动器中心高及结构代号（Ⅰ、Ⅱ、Ⅲ、Ⅳ、Ⅴ、Ⅵ） *Code Ⅰ.Ⅱ.Ⅲ.Ⅳ.Ⅴ.Ⅵ for center height of brake and structure*
- 制动盘直径和厚度 *Diameter and width of disc*
- 产品型号 *Type*

订货示例
Order Example

YPZ2-630×30Ⅲ/E201-MSKI右　YPZ2-450×30V/E50-MSK2-440V60HZ

盘式制动器 DISC BRAKES

YPZ2Ⅰ.Ⅱ.Ⅲ系列外形及安装尺寸 Outline and installation dimensions of the YPZ2Ⅰ.Ⅱ.Ⅲ

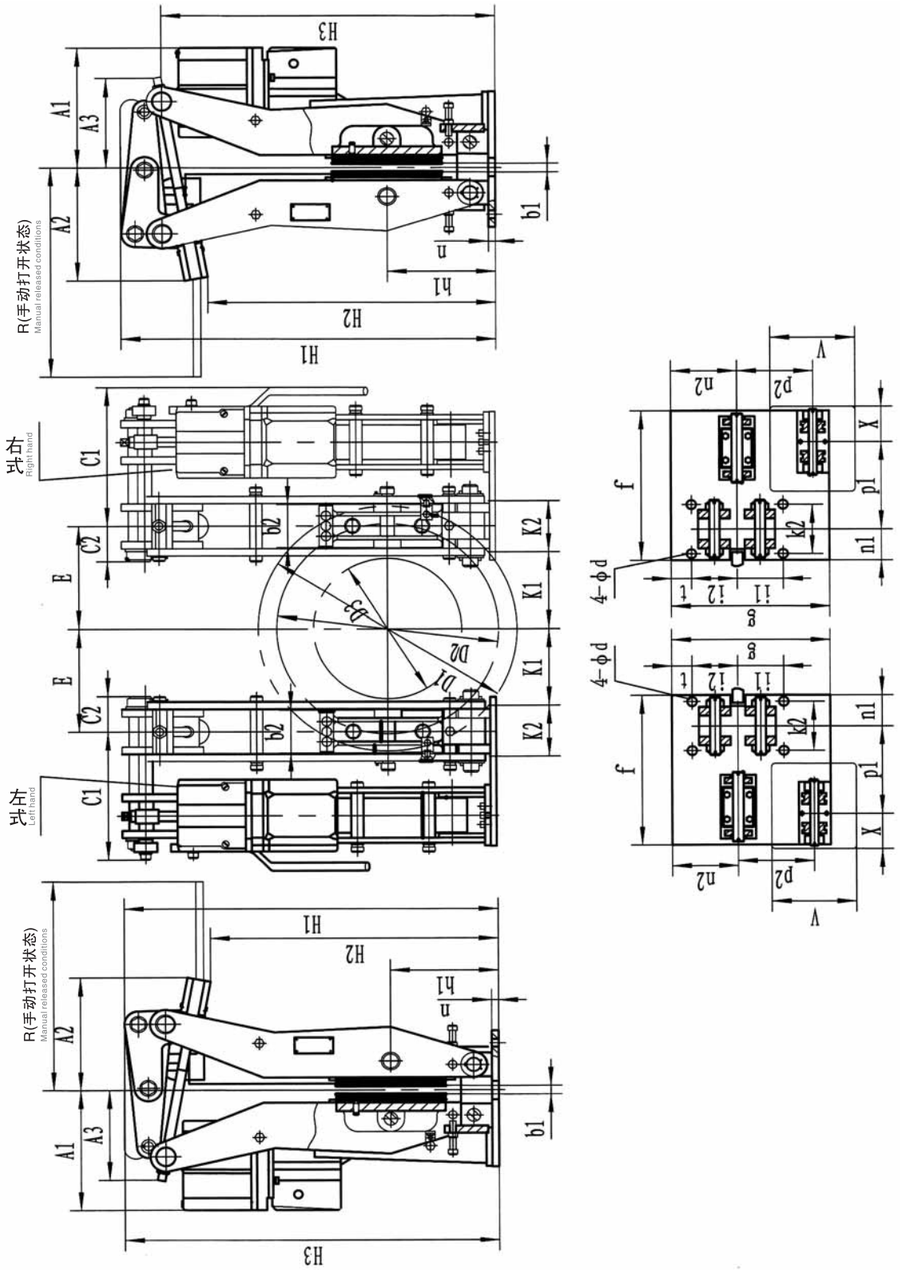

YPZ2Ⅰ系列盘式制动器尺寸及技术参数 *Dinensions and technical date of YPZ2Ⅰ series disc brakes*

单位：(mm)

推动器型号 Thruster type	t	H1	H2	H3	b2	Ød	f	g	h1	i1	i2	K2	A2	A3	n1	n2	p1	p2	q	n	C2	R	A1	C1	X	V
Ed23/5	20	710	515	630	70	18	310	300	230	180	80	120	230	235	80	100	175	160	20	15	75	460	280	297	80	200
Ed30/5																										
Ed50/6																							317	297	97	254
Ed80/6																										

与制动器有关的尺寸 Relative dimensions of brake disc								技术参数 Technical date(mm)									
制动盘径D1 Disc diameter	b1		s"	D2	D3	E	K1	配套推动器 Thruster				D1 制动盘直径 Disc diameter					整机重量 Weight (kg)
								推动器型号 Thruster type	功 率 Power (W)	额定电流 Rated Current(A)	重 量 Weight (kg)	315	355	400	450	500	
315	20	30	0.7~0.9	235	120	118	58					最大制动力矩 Max. Braking torque μ=0.36"(NM)					
355	20	30		275	160	138	78	Ed23/5	165	0.52	10	270	320				89
400	20	30		320	205	160	100	Ed30/5	200	0.46	14	380	440	520			95
450	20	30		370	255	185	125	Ed50/6	210	0.48	23	645	670	790	910	1000	102
500	20	30		420	305	210	150	Ed80/6	330	1.42	24	1030	1150	1350	1560	1750	104

YPZ2Ⅱ系列盘式制动器尺寸及技术参数 *Dinensions and technical date of YPZ2Ⅱ series disc brakes*

单位：(mm)

推动器型号 Thruster type	t	H1	H2	H3	b2	Ød	f	g	h1	i1	i2	K2	A2	A3	n1	n2	p1	p2	q	n	C2	R	A1	C1	X	V
Ed50/6	35	985	740	870	120	22	375	375	280	130	130	140	275	270	94	165	220	154	24	15	110	730	311	360	97	254
Ed80/6																										
Ed121/6																							302	367	120	260
Ed201/6																										

与制动器有关的尺寸 Relative dimensions of brake disc							技术参数 Technical date(mm)									
制动盘径D1 Disc diameter	b1	s"	D2	D3	E	K1	配套推动器 Thruster				D1 制动盘直径 Disc diameter					整机重量 Weight (kg)
							推动器型号 Thruster type	功 率 Power (W)	额定电流 Rated Current(A)	重 量 Weight (kg)	450	500	560	630	710	
450	30	0.7~1.1	350	180	175	105					最大制动力矩 Max. Braking torque μ=0.3"6(NM)					
500	30		400	230	200	130	Ed50/6	210	0.48	23	1025	1175	1350			178
560	30		460	290	230	160	Ed80/6	330	1.42	24	1720	1965	2260	2605		179
630	30		530	360	265	195	Ed121/6	330	1.44	39	2700	3085	3550	4090	4665	194
710	30		610	440	305	235	Ed201/6	450	1.45	39	4195	4790	5510	6350	7310	194

YPZ2Ⅲ系列盘式制动器尺寸及技术参数 *Dinensions and technical date of YPZ2Ⅲ series disc brakes*

单位：(mm)

推动器型号 Thruster type	t	H1	H2	H3	b2	Ød	f	g	h1	i1	i2	K2	A2	A3	n1	n2	p1	p2	q	n	C2	R	A1	C1	X	V
Ed121/6	35	1170	910	1045	120	27	415	460	370	180	180	160	305	310	110	215	228	206	30	20	120	735	354	394	120	260
Ed201/6																										
Ed301/6																										
Ed201/6																										

与制动器有关的尺寸 Relative dimensions of brake disc							技术参数 Technical date(mm)									
制动盘径D1 Disc diameter	b1	s"	D2	D3	E	K1	配套推动器 Thruster				D1 制动盘直径 Disc diameter					整机重量 Weight (kg)
							推动器型号 Thruster type	功 率 Power (W)	额定电流 Rated Current(A)	重 量 Weight (kg)	630	710	800	900	1000	1250	
630	30	0.7~1.3	500	310	250	170					最大制动力矩 Max. Braking torque μ=0.36"(NM)						
710	30		580	390	290	210	Ed121/6	330	1.44	39	3750	4500	5000	5600			294
800	30		670	480	335	255	Ed201/6	450	1.45	39	6305	7315	8450	9710	10970		291
900	30		770	580	385	305	Ed301/6	550	1.46	40	9170	10640	12290	14120	15960	20540	295
1000	30		870	680	435	355	注：1)s=每侧瓦块退距。2)D3=允许最大的连轴器外径。3)该摩擦系数为配套摩擦材料的平均值。										
1250	30		1120	930	560	480	Note:I) s=Brake clearance. 2) D3=Max. allowable coupling or hub diameter. 3) Average friction factor of standard friction materfals.										

注：具体型号、结构外形的尺寸保留更改的权利。

Note:Our company reserves the rights to change the actual type and overall dimensions of the structure.

YPZ2Ⅳ.Ⅴ.Ⅵ系列外形及安装尺寸 Outline and installation dimensions of the YPZ2Ⅳ.Ⅴ.Ⅵ

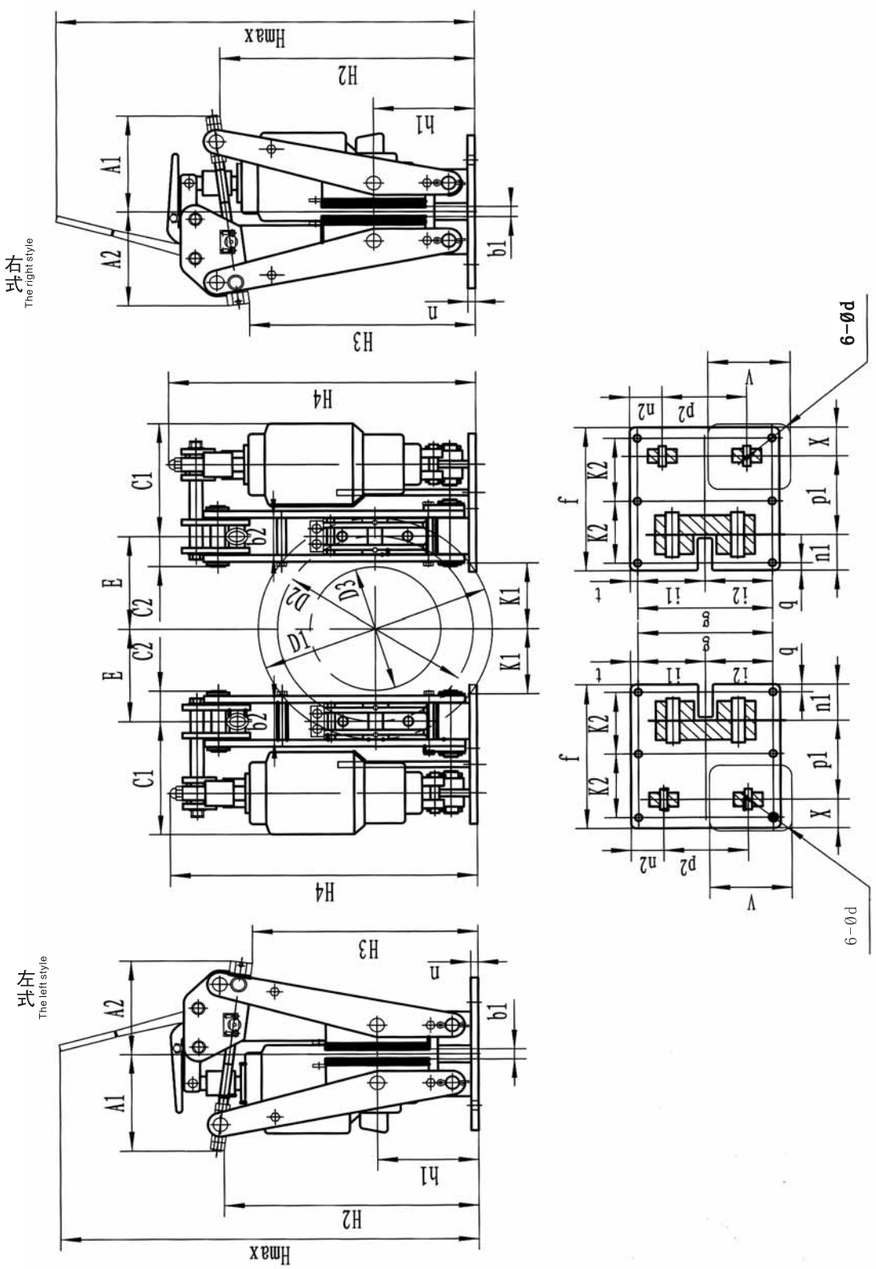

YPZ2Ⅳ系列盘式制动器尺寸及技术参数 *Dinensions and technical date of YPZ2 Ⅳseries disc brakes* 单位：(mm)

推动器型号 *Thruster type*	H1max	H2	H3	H4	b2	4-ød	f	g	h1	i1	i2	K2	A1	A2	n1	n2	p1	p2	V	q	n	C2	C1	X	t
Ed 23/5	612	400	340	500	56	14	230	270	160	80	150	100	208	198	52	40	133	130	200	14	15	60	215	80	20
Ed 30/5																									

与制动器有关的尺寸 *Relative dimensions of brake disc*							技术参数 *Technical date(mm)*													
制动盘径D1 *Disc diameter*	b1	s"	D2	D3	E	K1	配套推动器 *Thruster*				D1 制动盘直径 *Disc diameter*							整机重量 *Weight (kg)*
							推动器型号 *Thruster type*	功 率 *Power (W)*	额定电流 *Rated Current(A)*	重 量 *Weight (kg)*	250	280	315	355	400	450	500	
											最大制动力矩 *Max. Braking torque μ=0.36"(NM)*							
250	20	0.7~0.9	200	110	98	61	Ed23/5	165	0.52	10	200	230	260	300	345	395	445	71
280	20		230	140	113	76	Ed30/5	200	0.46	14	270	310	355	410	470	540	610	75
315	20		260	170	130	93												
355	20		300	210	150	113												
400	20		345	255	173	135												
450	20		395	305	197	160												
500	20		445	355	222	185												

YPZ2Ⅴ系列盘式制动器尺寸及技术参数 *Dinensions and technical date of YPZ2 Ⅴseries disc brakes* 单位：(mm)

推动器型号 *Thruster type*	H1max	H2	H3	H4	b2	6-ød	f	g	h1	i1	i2	K2	A1	A2	n1	n2	p1	p2	V	q	n	C2	C1	X	t
Ed 50/6	1100	537	474	645	75	18	330	360	230	145	145	130	275	228	90	110	165	177	254	25	18	80	322	95	35
Ed 80/6																									

与制动器有关的尺寸 *Relative dimensions of brake disc*							技术参数 *Technical date(mm)*													
制动盘径D1 *Disc diameter*	b1	s"	D2	D3	E	K1	配套推动器 *Thruster*				D1 制动盘直径 *Disc diameter*						整机重量 *Weight (kg)*
							推动器型号 *Thruster type*	功 率 *Power (W)*	额定电流 *Rated Current(A)*	重 量 *Weight (kg)*	355	400	450	500	560	630	
											最大制动力矩 *Max. Braking torque μ=0.36"(NM)*						
355	30	0.7~1.1	275	155	137.5	72.5	Ed 50/6	210	0.48	23	935	1085	1255	1425	1630	1870	97
400	30		320	200	160	95	Ed 80/6	330	1.42	24		1600	1850	2100	2400	2750	104
450	30		370	250	185	120											
500	30		420	300	210	145											
560	30		480	360	240	175											
630	30		550	430	275	210											

YPZ2Ⅵ系列盘式制动器尺寸及技术参数 *Dinensions and technical date of YPZ2 Ⅵ series disc brakes* 单位：(mm)

推动器型号 *Thruster type*	H1max	H2	H3	H4	b2	6-ød	f	g	h1	i1	i2	K2	A1	A2	n1	n2	p1	p2	V	q	n	C2	C1	X	t
Ed 122/6	1500	699	636	835	108	27	390	430	280	180	180	160	285	265	102	140	210	195	260	22	20	108	330	120	35
Ed 201/6																									
Ed 301/6																									

与制动器有关的尺寸 *Relative dimensions of brake disc*							技术参数 *Technical date(mm)*															
制动盘径D1 *Disc diameter*	b1	s"	D2	D3	E	K1	配套推动器 *Thruster*				D1 制动盘直径 *Disc diameter*										整机重量 *Weight (kg)*
							推动器型号 *Thruster type*	功 率 *Power (W)*	额定电流 *Rated Current(A)*	重 量 *Weight (kg)*	450	500	560	630	710	800	900	1000	1100		
											最大制动力矩 *Max. Braking torque μ=0.36"(NM)*										
450	30		350	170	175	95	Ed 122/6	330	1.44	39	2700	3100	3550	4100	4700	5400					220
500	30		400	240	200	120	Ed 201/6	450	1.45	39	4300	5000	5750	6600	7600	8800					220
560	30		460	300	230	150	Ed 301/6	550	1.46	40				9700	11200	12800	14700	16500	18150		220
630	30		530	370	265	185															
710	30		610	450	305	225															
800	30		700	540	350	270															
900	30		800	640	400	320															
1000	30		900	740	450	370															
1100	30		1000	840	500	420															

注：1)s=每侧瓦块退距。2)D3=允许最大的连轴器外径。3)该摩擦系数为配套摩擦材料的平均值。
Note:l) s=Brake clearance. 2) D3=Max. allowable coupling or hub diameter. 3) Average friction factor of standard friction materfals.

注：具体型号、结构外形的尺寸保留更改的权利。
Note:Our company reserves the rights to change the actual type and overall dimensions of the structure.

气动盘式制动器

Air disc brakes

应用： QP□.CQP□系列气动盘式制动器，广泛应用于中小型驱动机构的停车制动或减速制动。卷绕机构的张紧制动，如造纸厂卷纸张紧、新闻印刷时新闻纸的张紧控制、钢板(钢丝)卷展开张紧及电线电缆放线、放缆张紧控制等。

Application:

QP□.CQP□ series Pneumatic Disc Brakes are widely used for speed reducing ,stopping/braking of the low or medium torque driving mechanism. The brakes can also be applied as tension brake on winding machineries, such as: paper-web tension control, news paper publishing tension control, steel unwind control, wire and cable reel unwind tension etc.

使用条件

Operating conditions

●适合的环境温度：-20~+60℃。
●最大工作压力：7bar。
●气源要求：通入气包的压缩空气应干燥、洁净，不能含有腐蚀性气体。
●安装方式：适合于水平轴或垂直轴制动方式。水平轴制动方式时，可沿制动盘周围任意角度安装，但最好是水平安装：垂直轴制动方式时，角度不限：一个制动盘，可安装一台制动器，也可安装两台或两台以上制动器，但安装两台或两台以上时建议尽量对称安装。

● Ambient temperature: .-20℃~+60℃
● Operation air pressure (Max.): 7bar.
● Air requirement: dry and filtered compressed air, excluded corrosion gas.
● Installation: the brake is either horizontally mounted or vertically mounted. While it is used at horizontal shaft, the brake can be positioned within any angel around the disc, but ideally they should be mounted horizontally (in 3 org o'clock position); while it is applied at vertical shaft, no angle is required. Per disc can be fitted either one brake or two and more. When two or more brakes are applied, symmetrically installation is recommended.

主要特点

Main Design Features

●QP□系列为弹簧制动，气动释放；CQP□系列为气压制动，弹簧释放。
●整体结构简单，体积小，重量轻。
●无石棉制动衬垫，绿色环保。
●制动衬垫安装采用压簧卡装式，更换方便快捷。
●所有动力源无需单独设置，可与已有的空压站并网使用。

● QP□ series of spring brake , pneumatic release ; CQP□ series air brake , spring release.
● Overall structure is simple , small size, light weight .
● Non-asbestos brake pads , green .
● Install the brake pads mounted using spring loaded card , replace the quick and easy .
● No separate power source for all settings, with the existing Air Station and network use.

QP系列 *Series*

订货标记

Order Mark

QP(CQP)□ □ × □ - □
- 制动力矩 *Braking torque(Nm)*
- 制动盘厚度 *Disc thickness(mm)*
- 制动盘直径 *Disc diameter(mm)*
- 产品型号 *Type*

QP.CQP系列气动盘式制动器

QP.CQP series air disc brakes

CQP系列空压与制动力矩的关系

The relationship between air pressure and brake torque of CQP series

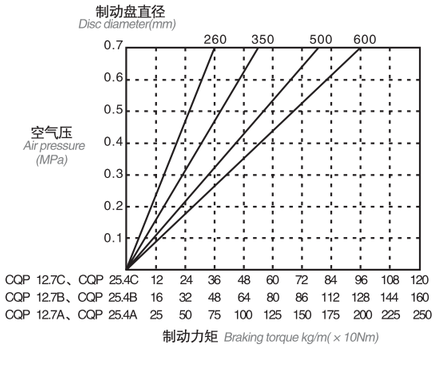

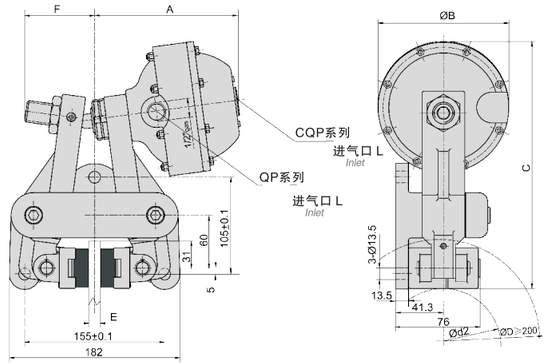

QP系列气动盘式制动器基本参数和尺寸 *Technical date and dinensions*

型 号 *Type*	A	B	C	D	E	F	L	d2	制动推力 *Braking impulse(N)*	最小释放压力 *Minimum release pressure(MPa)*	重 量 *Weight (kg)*
QP-12.7C	161.5	141	263	≥200	12.7	83.5	RC1/4	D-110	3000	0.5	9
QP-12.7B	189	176	280	≥200	12.7	83.5	RC1/4	D-110	5500	0.5	9.5
QP-12.7A	194	190	298	≥200	12.7	83.5	RC3/8	D-110	11000	0.5	11
QP-25.4C	161.5	141	263	≥200	25.4	79	RC1/4	D-110	3000	0.5	9
QP-25.4B	189	176	280	≥200	25.4	79	RC1/4	D-110	5500	0.5	9.5
QP-25.4A	194	190	298	≥200	25.4	79	RC3/8	D-110	11000	0.5	11

制动盘有效半径R=0.001×（制动盘半径-31）
制动力矩NM=制动推力×R

Brake disc effective radius R = 0.001 × (brake disc radius -31)
NM = brake braking torque thrust × R

CQP系列气动盘式制动器基本参数和尺寸 *Technical date and dinensions*

型 号 *Type*	A	B	C	D	E	F	L	d2	压缩比 *Compression ratio*	气缸容积 *Cylinder volume (dm^3)*	最大压力 *Maximum pressure (Mpa)*	重 量 *Weight (kg)*
CQP-12.7C	173	118	251	≥200	12.7	72.5	RC1/4	D-110	1.83	0.1	0.7	8.5
CQP-12.7B	173	141	263	≥200	12.7	72.5	RC1/4	D-110	1.83	0.2	0.7	9
CQP-12.7A	173	176	280	≥200	12.7	72.5	RC1/4	D-110	1.83	0.4	0.7	9.5
CQP-25.4C	175	118	251	≥200	25.4	72	RC1/4	D-110	1.83	0.1	0.7	8.5
CQP-25.4B	175	141	263	≥200	25.4	72	RC1/4	D-110	1.83	0.2	0.7	9
CQP-25.4A	175	176	280	≥200	25.4	72	RC1/4	D-110	1.83	0.4	0.7	9.5

注：1、气包的安装位置有左式和右式，订货时注明。
2、可生产不同盘厚、不同安装尺寸的气动钳盘制动器。
3、具体型号、结构外形尺寸保留更改的权利。

Note : 1、air bag is installed with left-and right-hand side , specify when ordering .
2 、can produce different plate thickness , different installation size pneumatic clamp disc brake .
3 、the specific model , the structure to retain the right to change dimensions .

QPD.CQPD系列气动盘式制动器

QPD.CQPD series air disc brakes

CQPD系列空压与制动力矩的关系

The relationship between air pressure and brake torque of CQPD series

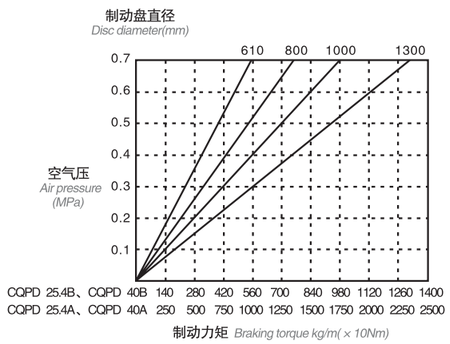

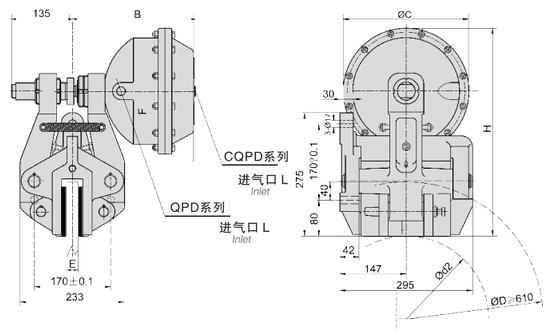

QPD系列气动盘式制动器基本参数和尺寸 *Technical date and dinensions*

型 号 *Type*	B	C	D	E	H	L	d2	制动推力 *Braking impulse(N)*	最小释放压力 *Minimum release pressure(MPa)*	重 量 *Weight (kg)*
QPD-25.4B	220	190	≥610	25.4	417.5	RC3/8	D-250	14150	0.5	61
QPD-25.4A	299	280	≥610	25.4	462.5	RC1/2	D-250	32000	0.5	70
QPD-40B	220	190	≥610	40	417.5	RC3/8	D-250	14150	0.5	61
QPD-40A	299	280	≥610	40	462.5	RC1/2	D-250	32000	0.5	70

制动盘有效半径R=0.001×（制动盘半径-65）
制动力矩NM=制动推力×R

Brake disc effective radius R = 0.001 × (brake disc radius -65)
NM = brake braking torque thrust × R

CQPD系列气动盘式制动器基本参数和尺寸 *Technical date and dinensions*

型 号 *Type*	B	C	D	E	H	L	d2	压缩比 *Compression ratio*	气缸容积 *Cylinder volume (dm³)*	最大压力 *Maximum pressure (Mpa)*	重 量 *Weight (kg)*
CQPD-25.4B	220	190	≥610	25.4	417.5	RC3/8	D-250	2.82	0.7	0.7	57
CQPD-25.4A	299	280	≥610	25.4	462.5	RC1/2	D-250	2.82	3	0.7	63
CQPD-40B	220	190	≥610	40	417.5	RC3/8	D-250	2.82	0.7	0.7	57
CQPD-40A	299	280	≥610	40	462.5	RC1/2	D-250	2.82	3	0.7	63

注：1、气包的安装位置有左式和右式，订货时注明。
2、可生产不同盘厚、不同安装尺寸的气动钳盘制动器。
3、具体型号、结构外形尺寸保留更改的权利。

Note : 1、air bag is installed with left-and right-hand side , specify when ordering .
2 、can produce different plate thickness , different installation size pneumatic clamp disc brake .
3 、the specific model , the structure to retain the right to change dimensions .

QPL,CQPL系列气动盘式制动器

QPL, CQPL series air disc brakes

CQPL系列空压与制动力矩的关系

The relationship between air pressure and brake torque of CQPL series

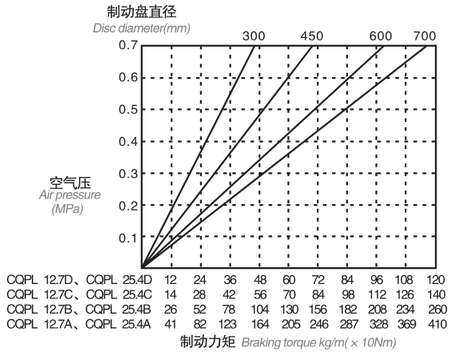

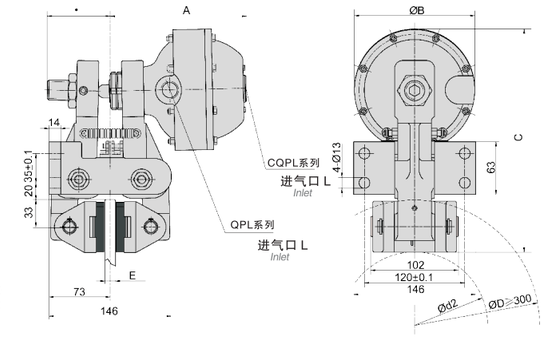

QP系列气动盘式制动器基本参数和尺寸 *Technical date and dinensions*

型 号 *Type*	A	B	C	D	E	F	L	d2	制动推力 *Braking impulse(N)*	最小释放压力 *Minimum release pressure(MPa)*	重 量 *Weight (kg)*
QPL-12.7C	161.5	141	264	≥300	12.7	72.5	RC1/4	D-110	3000	0.5	12
QPL-12.7B	189	176	281.5	≥300	12.7	72.5	RC1/4	D-110	5500	0.5	13
QPL-12.7A	194	190	288.5	≥300	12.7	72.5	RC3/8	D-110	10400	0.5	15.1
QPL-25.4C	162	141	265.5	≥300	25.4	72	RC1/4	D-110	3000	0.5	12
QPL-25.4B	189.5	176	283	≥300	25.4	72	RC1/4	D-110	5500	0.5	13
QPL-25.4A	194.5	190	290	≥300	25.4	72	RC3/8	D-110	10400	0.5	15.1

制动盘有效半径R=0.001×（制动盘半径-31）
制动力矩NM=制动推力×R

Brake disc effective radius R = 0.001 × (brake disc radius -31)
NM = brake braking torque thrust × R

CQP系列气动盘式制动器基本参数和尺寸 *Technical date and dinensions*

型 号 *Type*	A	B	C	D	E	F	L	d2	压缩比 *Compression ratio*	气缸容积 *Cylinder volume (dm³)*	最大压力 *Maximum pressure (Mpa)*	重 量 *Weight (kg)*
CQPL-12.7D	125	118	252.5	≥300	12.7	72.5	RC1/4	D-110	1.86	0.1	0.7	9.5
CQPL-12.7C	127	141	264	≥300	12.7	72.5	RC1/4	D-110	1.86	0.2	0.7	10.3
CQPL-12.7B	139.5	176	281.5	≥300	12.7	72.5	RC1/4	D-110	1.86	0.4	0.7	11.5
CQPL-12.7A	194	190	288.5	≥300	12.7	72.5	RC3/8	D-110	1.86	0.7	0.7	14.3
CQPL-25.4D	125.5	118	252.5	≥300	25.4	72	RC1/4	D-110	1.86	0.1	0.7	9.5
CQPL-25.4C	127	141	264	≥300	25.4	72	RC1/4	D-110	1.86	0.2	0.7	10.3
CQPL-25.4B	140	176	281.5	≥300	25.4	72	RC1/4	D-110	1.86	0.4	0.7	11.5
CQPL-25.4A	194.5	190	288.5	≥300	25.4	72	RC3/8	D-110	1.86	0.7	0.7	14.3

注：1、气包的安装位置有左式和右式，订货时注明。
2、可生产不同盘厚、不同安装尺寸的气动钳盘制动器。
3、具体型号、结构外形尺寸保留更改的权利。

Note : 1、air bag is installed with left-and right-hand side , specify when ordering .
2 、can produce different plate thickness , different installation size pneumatic clamp disc brake .
3 、the specific model , the structure to retain the right to change dimensions .

DCPZ系列电磁盘式制动器

DCPZ series electromagnetic disc brake

使用条件

Operating conditions

- 环境温度：-25℃~40℃
- 使用地点的海拔高度不超过2000m。
- 周围工作环境中无爆炸危险的介质及足以腐蚀金属和破坏绝缘的气体和导电尘埃。
- 在空气相对湿度不大于90%的室内或有防雨、雪的装置下使用。
- 电源电压为AC380V/50Hz，若用户有特殊要求，请订货时协商确定。

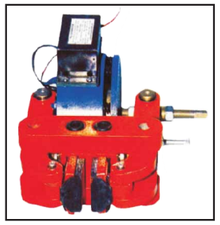

DCPZ系列 Series

- *Ambient temperature : -25 ℃~+40 ℃*
- *Place of use does not exceed the altitude of 2000m.*
- *Around the working environment without risk of explosion of media and is sufficient to corrode metal and damage the insulation of the gas and electrical conductivity angstroms .*
- *Relative humidity in the air is not dry or 90% of the indoor rain , snow equipment to use .*
- *Supply voltage AC380V/50Hz, if users have special requirements , please when ordering consultation.*

订货标记

Order Mark

DCPZ □-□-□

- 特殊要求(可用文字说明) *Special requirement (can be specified in words)*
- 所配电磁铁型号 *The solenoid model with*
- 制动盘厚度 *Disc thickness(mm)*
- 产品型号 *Type*

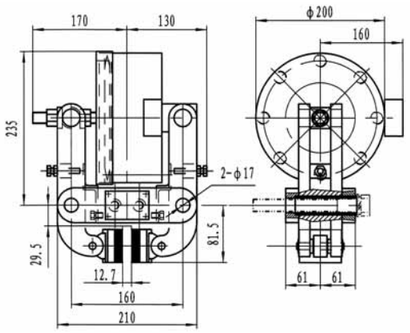

技术参数 Technical date \ 型号 Type			DCPZ12.7-250	DCPZ12.7-300	DCPZ12.7-400
制动盘厚 Brake disc thickness(mm)			12.7		
额定制动力 Amount of custom power(N)			900	1800	2600
退 距 Back from the(mm)			0.5		
制动盘有效半径 Brake disc effective radius(m)			制动盘实际半径-0.03 The actual radius of the brake disc -0.03		
额定制动力距 From the amount of custom power(Nm)			额定制动力X制动盘有效半径 X amount of custom power brake disc effective radius		
配用电磁铁 Equipped with a solenoid	型号 Type		DT250-250Y	DT300-315Y	DT400-400Y
	行程 Travel(mm)	初始 Initial	3.5		4
		最大 Maximum	7		8
	操作频率 Operating frequency(c/h)		1200		
	电流 Current(A)	起动 Start	3		3.5
		维持 Maintain	0.1		0.3
重 量 Weight(kg)			26	28	30

DJPZ系列电机盘式制动器

DJPZ series disc brake motors

应用：DJPZ电机盘式制动器是电气传动系统的重要组成器件，它与Y系列电动机配套组成一种新型的YEJ系列电磁制动三相异步电动机。主要应用于冶金，化工，建筑，矿山机械等行业，实现快速停车和准确定位，对机构进行安全制动。该制动器具有结构紧凑，安装方便，噪音低，灵敏度高、制动可靠等优点。

Application:

DJPZ disc brake motor drive system is an important component of the electrical devices , supporting it with the Y series motors are composed of a new type of YEJ series electromagnetic brake three-phase asynchronous motor . Mainly used in metallurgy , chemical industry , construction, mining machinery , etc. , to achieve fast and accurate positioning of parking , safety brake for institutions . The brake has a compact , easy installation, low noise , high sensitivity and reliable braking .

使用条件

Operating conditions

- 海拔高度不超过2000米。
- 周围介质无足以腐蚀金属，破坏绝缘的气体和尘埃。
- 周围空气湿度小于90%。
- 安装时，摩擦盘和摩擦片及制动器内不得有油污和尘埃。
- 系列制动器线圈绝缘等级：B级。
- 电源380V，50Hz，工作方式为S1或S3

DJPZ系列 Series

- *Altitude less than 2,000 meters.*
- *Not enough to corrode metal surrounding medium , the gas and dust damage the insulation .*
- *Ambient air humidity less than 90 %.*
  Installation, friction plate and friction plate and shall not have oil and brake dust .
- *Series brake coil insulation class: B .*
- *Power Supply 380V, 50Hz, works for the S1 or S3*

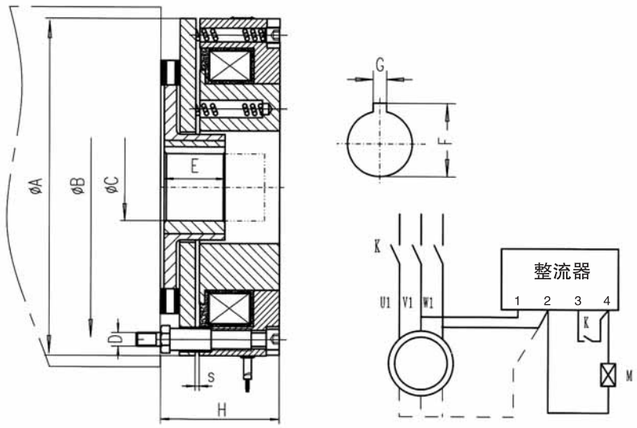

注：序号1、2、3、4为接线端子，M为制动器线圈。虚线为AC220V DC99V接线。

Note: The number of terminals 1,2,3,4 , M is the brake coil . Dashed line for AC220V DC99V wiring .

DJPZ系列电机盘式制动器基本参数和尺寸 *Technical date and dinensions*

YEJ电机 *YEJ motor*		型号 *Type*	制动力矩 *Braking torque*	额定功率 *Rated Power*	接通时间 *On-time*	断开时间 *Off time*	励磁时间 *Excitation time*
机座号 *Frame*	额定功率 *Rated Power*						
90	1.1~2.2	DJPZ114-18	18	60	0.12	0.11	99
100	1.5~3	DJPZ133-30	30	80	0.14	0.12	
112	2.2~4	DJPZ150-40	40	110	0.16	0.15	170
132	2.2~7.5	DJPZ170-80	80	130	0.17	0.15	
160	4~18.5	DJPZ202-160	160	150	0.22	0.21	
180	11~22	DJPZ244-230	230	150	0.25	0.23	
200	15~37	DJPZ280-400	400	200	0.33	0.31	
225	22~35	DJPZ300-530	530	200	0.37	0.35	

注：线圈功率指20℃时，随选择输入电压不同允许有10%差异。
具体型号、结构外形尺寸保留更改的权利。

Note : Coil power refers to 20 ℃, with the choice of different input voltage to allow a 10% difference.
the specific model , the structure to retain the right to change dimensions .

单位：(mm)

型号 *Type*	A	B	C	D	E	F	G	H	S	Smax	重 量 *Weight(kg)*
DJPZ114-18	126	114	24.8	3XM6	25	28.1	8	59	0.4	1.0	4.7
DJPZ133-30	145	133	29.5	3XM6	30	32.8	8	60	0.4		5.4
DJPZ150-40	165	150	29.5	3XM8	30	32.8	8	62	0.5		7.8
DJPZ170-80	188	170	39.5	3XM8	30	42.8	12	75	0.5	1.2	9.8
DJPZ202-160	220	202	44.5	4XM10	35	47.8	12	90	0.6		16
DJPZ244-230	265	244	40	4XM10	40	52.8	14	108	0.6		22.7
DJPZ280-400	310	280	59	4XM12	50	63.4	18	117	0.8	1.5	36
DJPZ300-530	330	300	65	4XM12	55	69.4	18	127	0.5		42

注：S值为正常工作气隙。
具体型号、结构外形尺寸保留更改的权利。

Note : S is working air gap .
the specific model , the structure to retain the right to change dimensions .

SB、SBD系列 液压安全制动器

SB,SBD Series Safety Brakes

应用： 液压安全(紧急)制动器，是一种使用在低速轴(卷筒轴)上的大功率制动装置，可广泛用于大中型起重机、港口装卸机械起升以及臂架府仰机构低速轴的紧急安全制动。矿用卷扬机、提升机和大功率倾角式皮带运输机的工作制动和紧急安全制动，缆车和索缆起重机驱动机构的安全制动，铸造起重机等特种起重机起升机构低速轴的安全(紧急)制动。

Application:

Hydraulic safety (emergency) brakes are high-power braking devices which can be wildly used as emergency safety brake on low speed shafts for the lifting control and pitching mechanism of various large and middle crane 、 port handling machinery. They are also applied for the same purpose for mine winder ,lifter ,elevators ,belt conveyers ,cable cars, foundry and cable cranes and so on.

主要特点 Main Design Features

- 常闭式设计，安全可靠；特制碟簧施力制动，需另配液压驱动释放装置。
- 动作灵敏，闭合(上闸)时间短。
- 可配有开闸限位开关和衬垫磨损极限限位开关，可进行联锁保护和故障显示(采用PLC控制时)。
- 高性能无石棉硬质摩擦衬垫，摩擦系数稳定，不损伤制动盘且对水介质和盐雾(海水)不敏感。
- 合理的密封结构设计和进口名牌密封件。效果好、寿命长。
- 安装位置灵活，使用、调整、维护简单。

- *Normally closed design, safe and reliable; specially-designed disc springs applied.*
- *Swift actions and short braking time.*
- *Equipped with release limit switch and lining wear limit-switch can realize interlocking protection and failure indication by PLC.*
- *Brake lining is made from non-asbestos hard material, which has high and stable friction performance, and it is insensitive to water, salt and other environmental agents.*
- *Excellent sealing ensure the brake long service life.*
- *Convenient of installation and ease of maintenance.*


SB系列 *Series*


SBD□-A系列 *Series*


SBD□-B系列 *Series*

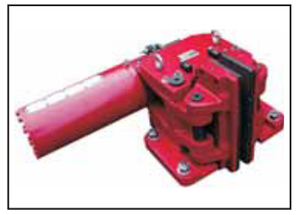
SBD□-C系列 *Series*

SB系列安全制动器

SB series Safety Brakes

使用条件

Operating conditions

- 环境温度：25℃~+40℃
- 相对湿度：<90%

有特殊要求时在订货时协商确定

- *Ambient temperature:25℃~+40℃*
- *Relative humidity:<90%*

Special requirements can be discussed in order.

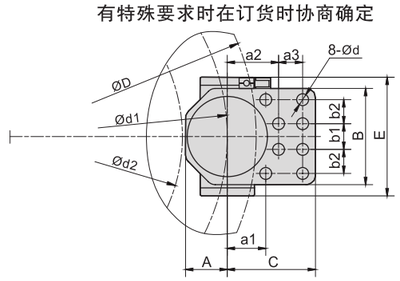

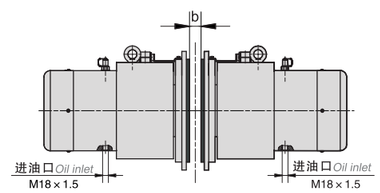

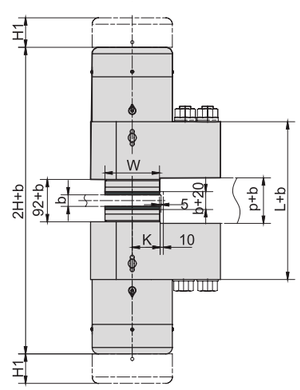

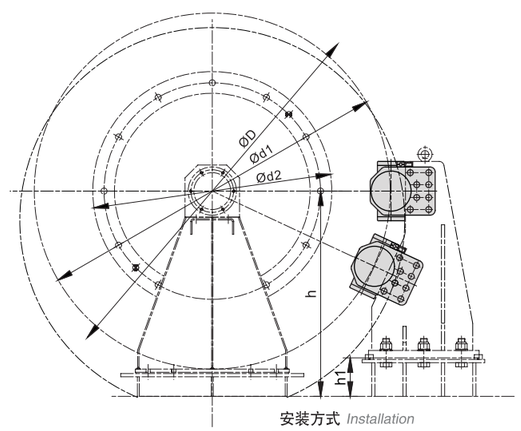

安装方式 *Installation*

h,h1 由用户确定 *h1 Determined by the user*

订货标记

Order Mark

SB□-□×□ □

- 特殊要求（可用文字说明） *Special requirement(can be specified in words)*
- 制动盘径和厚度 *Disc diameter and width*
- 产品型号 *Type*

订货示例

Order Example

SB250-2200×40　表示额定夹紧力为 250KN, 制动盘直径为 2200mm, 盘厚为 40mm

SB250-2200×40, Rated clamping force is 250KN, braking disc diameter is 2200mm, disc thickness is 40mm

SB 系列安全制动器技术参数 *Technical data of SB series safety brakes*

产品型号 *Type*	夹紧力F *Clamp force (KN)*	释放压力 *Release pressure* (MPa)	开闸油量 *Oil cylinder volume (ml)*	退距 *Clearance (mm)*	摩擦系数 μ Friction coefficient	安装螺栓/性能等级/安装扭矩 *Requested bolts;performance class; Installation torque*	不含支架重量 *Weight bracket excluded (kg)*
SB50	50	11	30	1-2	0.36	8-M20、10.9、680	90
SB100	100	12	50	1-2	0.36	8-M24、10.9、1200	150
SB160	160	12	70	1-2	0.36	8-M30、10.9、2200	310
SB250	250	13	95	1-2	0.36	8-M36、10.9、3540	552
SB315	315	14	115	1-2	0.36	8-M36、10.9、3540	672
SB400	400	12	170	1-2	0.36	8-M48、10.9、7400	1100

制动力矩 *Nm=F× ×d1　Torque in Nm=F× ×d1*　　尺寸表 *Dimensions(mm)*

产品型号 Type	A	a1	a2	a3	b1	b2	B	C	d	k	P	L	E	W	H	H1
SB50	77	77	90	38	38	38	154	150	20.5	56	102	300	240	110	310	80
SB100	95	95	105	45	55	45	190	180	25	71	102	348	286	140	360	85
SB160	110	120	135	65	70	65	260	235	31	87	106	412	370	170	410	95
SB250	130	120	160	75	80	75	300	275	37	87	106	456	370	170	470	110
SB315	140	175	205	85	90	82.5	335	330	37	137	106	476	410	270	500	110
SB400	170	180	220	120	110	110	440	420	50	137	142	602	546	270	560	115

与制动盘有关尺寸 *Relative Dimensions of brake disc(mm)*

产品型号 *Type*	b			D	d1	$d2^{Max}$
SB50	30	36	40	⩾ 500	D-120	D-300
SB100	30	36	40	⩾ 500	D-150	D-380
SB160	30	36	40	⩾ 600	D-180	D-440
SB250	30	36	40	⩾ 600	D-180	D-480
SB315	30	36	40	⩾ 1200	D-280	D-600
SB400	30	36	40	⩾ 1800	D-280	D-660

d1=理论摩擦直径 *d1=the theoretical friction diameter*

d2=允许最大的卷筒或联接毂外径 *d2=max .allowable drum or hub diameter*

D: 为其它盘径，如有需要请与我们联系 *For other disc diameters please contact us*

SBD□-A系列安全制动器

SBD□-A series Safety Brakes

安装及外形尺寸 Outline and installation dimensions

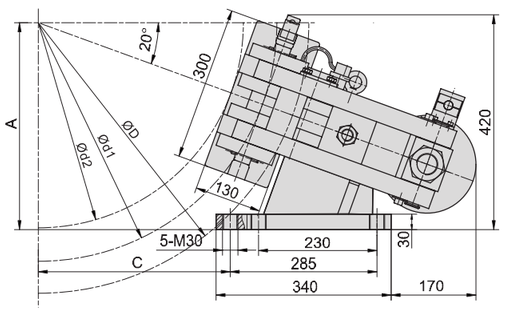

底板连接尺寸

Base plate connection dimensions

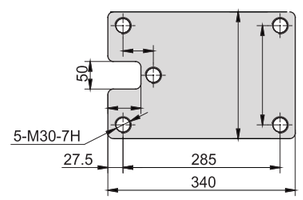

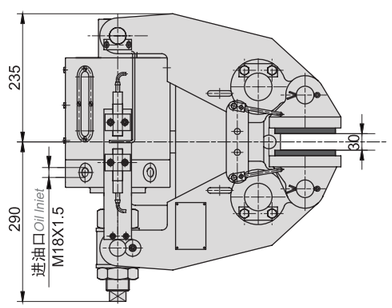

安装形式：Ⅱ型 *Version: II*

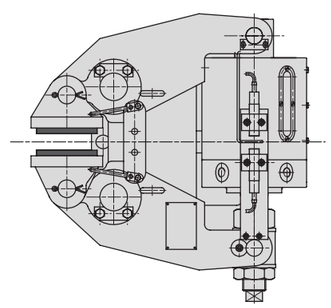

安装形式：Ⅰ型 *Version: I*

安装示意图 Installation diagram

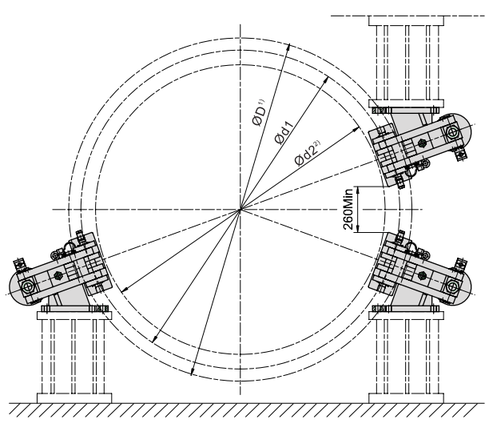

制动力矩：M=μ×d1×F(Nm)

式中：μ– 摩擦系数取值 μ=0.35

d1– 制动盘计算摩擦直径， d1=D-130(mm)

F– 制动时总夹紧力 (KN)

注：1) 制动盘盘径用于 Ø800 ≤ ØD ≤ Ø1800,

如需其它盘径请与我们直接联系

2)d2– 允许的最大卷筒或联接毂外径， d2=D-270(mm)

Braking torque: M=μ×d1×F(Nm)

In it: μ-the value of friction coefficient μ=0.35

d1-disc friction diameter d1=D-130(mm)

F-total clamp froce(KN)

Notes: 1)D-brake disc dia.for Ø800 ≤ ØD ≤ Ø1800

If you have other requirements,please contact with us.

2)d2-d2=max .allowable drum or hub diameter d2=D-270(mm)

SBD□–A系列安全制动器尺寸和技术参数 *Dimensions and technical data of SBD series safety brakes*

产品型号 *Type*	总夹紧力 *Total clamp force(KN)*	制动力 *Braking force (KN)*	油缸工作压力 *Cylinder pressure (bar)*	开闸油量 *Oil volume (ml)*	开闸间隙 *Releasesd clearance (mm)*	重量 *Weight (kg)*	A(mm)	C(mm)	d1(mm)	d2max (mm)	D(mm)
SBD100-A	100	72	70	70	0.75~1.5	195	0.171ØD+220	0.470ØD–127	ØD–135	ØD–270	Ø800≤ØD≤Ø1800
SBD125-A	125	90	90	90	0.75~1.5	195					
SBD160-A	160	115	110	110	0.75~1.25	195					
SBD200-A	200	144	100	100	0.75~1.5	235					
SBD250-A	250	180	120	120	0.75~1.25	235					

注： SBD □ –A 系列安全制动器为原型号 SBD 系列安全制动器。

Note:The original types of SBD □ –A series safty brakes are SBD.

订货标记 Order Mark

SBD □–□–□× □ □ □ □

- 特殊要求(可用文字说明) *Special requirement (can be specified in words)*
- 附加装置 *Additional option*
  - K1 开闸限位开关 *Release limit-switch*
  - K3 衬垫磨损极限限位开关 *Lining wear limit-switch*
  - K2 闭闸限位开关 *Closed limit-switch*
- 制动器安装形式：Ⅰ Ⅱ（参见尺寸图）*Installation: Ⅰ, Ⅱ*
- 制动盘厚度 *Disc thickness*
- 制动盘直径 *Disc diameter*
- A型 *Type* / B型 *Type* / C型 *Type*
- 额定夹紧力 *Rated clamp force*
- 产品型号 *Type*

订货示例 Order Example

示例：SBD250–A–1600X30 Ⅰ K1 表示额定夹紧力为250KN，带开闸限位开关，Ⅰ型安装的A型安全制动器。制动盘直径为1600mm，盘厚为30mm.

For example: SBD250-A-1600×30 Ⅰ K1 means its rated clamp is 250KN with release limit switch and require Ⅰ type installation. The brake disc diameter is 1600mm and the disc thickness is 30mm.

SBD80-B,SBD160-B系列安全制动器

SBD80-B,SBD160-B series Safety Brakes

安装及外形尺寸 Outline and installation dimensions

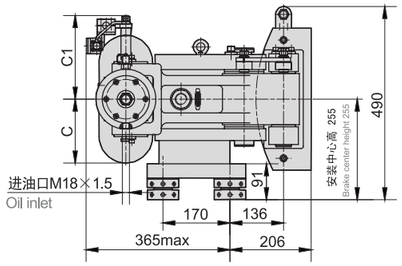

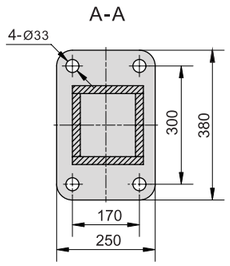

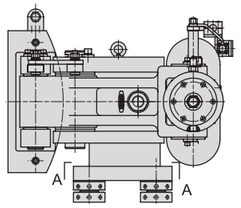

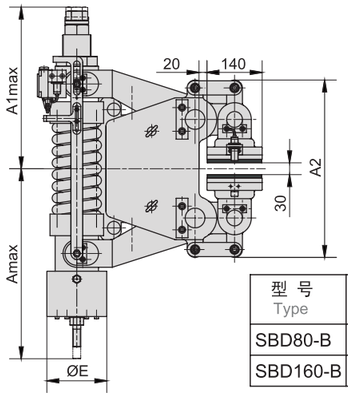

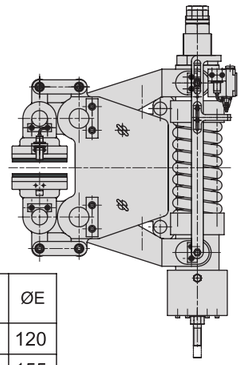

尺寸表 Dimensions

型 号 Type	Amax	A1max	A2	C	C1	ØE
SBD80-B	470	390	450	115	150	120
SBD160-B	485	415	460	165	215	155

安装型式Version：Ⅱ型

安装型式Version：Ⅰ型

安装示意图 Installation diagram

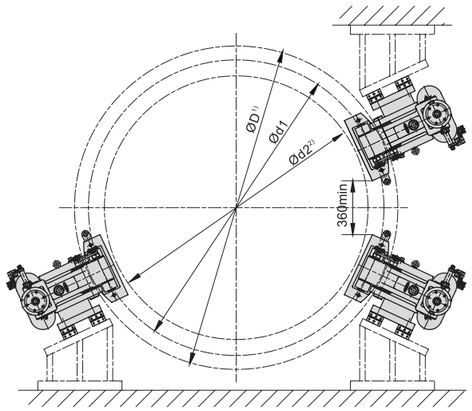

制动力矩：M=μ×d1×F(Nm)

式中：μ–摩擦系数取值μ=0.35

d1–制动盘计算摩擦直径，d1=D-150(mm)

F–制动时总夹紧力(KN)

注：1)D–制动盘盘径D≥1800(mm)

2)d2–允许的最大卷筒或联接毂外径，d2=D-360(mm)

Braking torque: M=μ×d1×F(Nm)

In it: μ-the value of friction coefficient μ=0.35

d1-disc friction diameter d1=D-150(mm)

F-total clamp froce(KN)

Notes: 1)D-disc diameter D ≥ 1800(mm)

2)d2-max .allowable drum or hub diameter d2=D-360(mm)

SBD250-C,SBD365-C,SBD425-C系列安全制动器

SBD250-C,SBD365-C,SBD425-C series Safety Brakes

安装及外形尺寸 Outline and installation dimensions

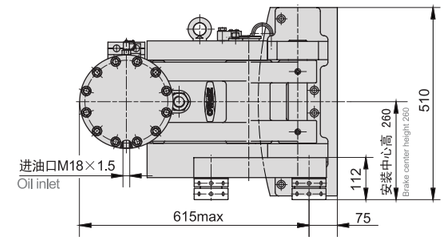

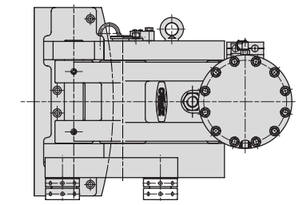

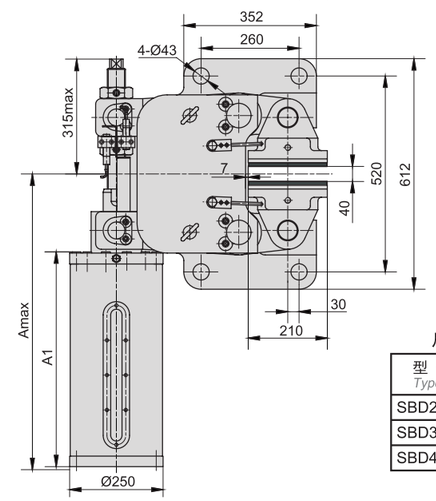

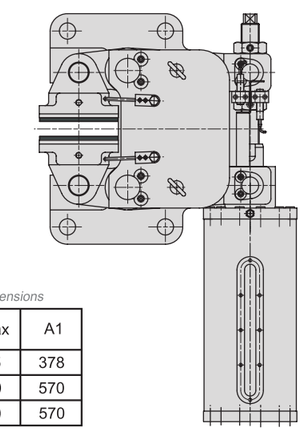

尺寸表 Dimensions

型 号 Type	Amax	A1
SBD250-C	595	378
SBD365-C	790	570
SBD425-C	790	570

安装型式Version：Ⅱ型

安装型式Version：Ⅰ型

安装示意图 Installation diagram

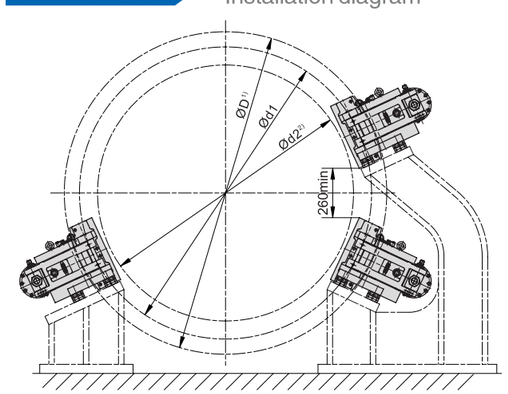

制动力矩：M=μ×d1×F(Nm)

式中：μ–摩擦系数取值μ=0.35

d1–制动盘计算摩擦直径，d1=D–220(mm)

F–制动时总夹紧力(KN)

注：1)D–制动盘盘径D≥1800(mm)

2)d2–允许的最大卷筒或联接毂外径，d2=D–500(mm)

Braking torque: M= M=μ×d1×F(Nm)

In it: μ-the value of friction coefficient μ=0.35

d1-disc friction diameter d1=D-220(mm)

F-total clamp froce(KN)

Notes: 1)D-disc diameter D ≥ 1800(mm)

2)d2-max .allowable drum or hub diameter d2=D-500(mm)

SBD□-B,SBD□-C系列安全制动器

SBD□-B,SBD□-C series Safety Brakes

SBD系列安全制动器技术参数 *Technical date of series safety brakes*

产品型号 *Type*	额定夹紧力 *Rated clamp force(KN)*	制动力 *Braking force (KN)*	单侧瓦块退距 *Single-side shoe clearance (mm)*	油缸工作压力 *Cylinder pressure (bar)*	油缸开闸油量 *Oil cylinder volume (ml)*	重量 *Weight (kg)*
SBD80–B	80	57	1~2	9.5	55	270
SBD160–B	160	115	1~2	9.5	115	310
SBD250–C	250	180	1~2	8	275	660
SBD365–C	365	262	1~2	8	275	720
SBD425–C	425	306	1~2	9.5	275	730

注：1)SBD80–B、SBD160–B、SBD250–C、SBD365–C、SBD425–C系列安全制动器为原型号SBB80、SBBI60、SBB250、SBB365、SBB425系列安全制动器。
2)摩擦系数μ=0.35

Note: 1) The original types of SBD80-B, SBD 160-B, SBD250-C, SBD365-C, SBD425-C series safiy brakes are SBB80, SBB 160, SBB250, SBB365, SBB425.
2)Kinetic friction coefficient μ =0.35.

订货标记

Order Mark

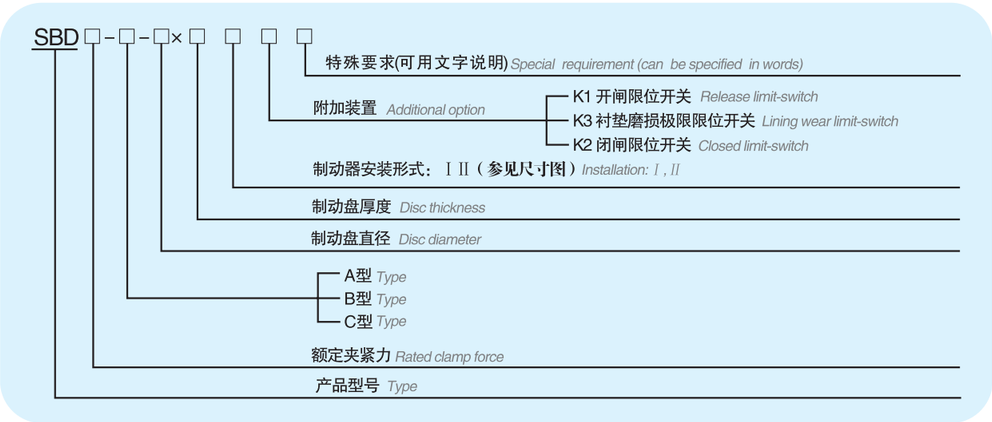

订货示例

Order Example

示例：SBD365–C–2200x40 Ⅰ K1–表示额定夹紧力为365KN、带开闸限位开关、 Ⅰ 型安装的C型安全制动器。制动盘直径为2200mm， 盘厚为40mm。

Sample: SBD365–C–2200 x40 Ⅰ K1 means its rated clamp is 365KN with release limit switch and require Ⅰ type installation.The brake disc diameter is 2200mm and the disc thickness is 40mm.

SE、SH、SP系列 失效保护盘式制动器

SE, SH, SP series of fail–safe disc brake

应用： SE、SH、SP系列失效保护盘式制动器与鼓式制动器相比具有结构紧凑、制动力大、安装方便等优点，它主要用于起重、运输、冶金、矿山、港口、建筑机械、电缆、吊索设备、风力发电机、纺织机械等各行业的多种机械驱动配套的机械制动或减速。

Application:

SE, SH, SP series of fail-safe disc brake with compact structure compared to drum brakes , the braking force large , easy installation, etc. , it is mainly used for lifting , transportation, metallurgy , mining , ports, construction machinery , cable , sling equipment , wind generators, textile machinery and other industries supporting a variety of machine –driven mechanical braking or deceleration .

使用条件

Operating conditions

- 环境温度：–20℃~+50℃
- 空气相对湿度≤90%。
- 周围工作环境中不得有易燃、易爆气体。
- 使用地点的海拔高度符合GB755–2000。
- 户外雨雪侵蚀或由腐蚀性气体和介质应采用防腐型产品。

- *Ambient temperature:–20~+50℃.*
- *Relative humidity:≤90%*
- *Around the workplace shall not commit any flammable, explosive and corrosive gases.*
- *Altitude locations comply with GB755–2000.*
- *Outdoor rain erosion or corrosive gases and media should be corrosion products.*

主要特点

Main Design Features

- 结构紧凑，制动力矩大；
- 带自动补偿装置，响应时间短；
- 可用于工作制动和安全制动。
- 工作制动器，允许高频率制动。
- 常闭式设计，安全可靠；

- *Compact structure , braking torque ;*
- *With automatic compensation device , the response time is short ;*
- *Can be used to work the brake and safety brake .*
- *Working brakes, allowing high– frequency braking .*
- *Normally closed design , safe and reliable ;*

工作制动器 Working brake

可配有开闸限位开关盒衬垫磨损极限开关，可进行联锁保护盒故障显示
制动力矩大，维修费用低，带衬垫磨损自动补偿装置（制动力矩稳定），响应时间短。
安装公差大，制动盘端面跳动：最大值±0.22mm。底座相对于制动盘的垂直度偏差：最大值±4‰。
制动盘相对于底座中心距偏差：最大值±2.5mm。

Gate can be equipped with limit switch limit switch box liner wear , can be interlock fault display box
Braking torque, and low maintenance costs, with automatic pad wear compensation device (braking torque stability) , the response time is short .
Installation tolerances , brake disc face runout : maximum ± 0.22mm. Base relative to the vertical deviation disc brake : maximum ± 4 ‰.
Brake disc relative to the base of the center distance deviation : max ± 2.5mm.

该系列包含下列类型制动器：

561SE、560SE、56SE、5SE、450SE、3SE制动器（电磁释放）工作时须配套专用电源。

5SP、450SP、4SP、3SP制动器（气压释放）（5bar）

5SH、450SH、4SH、3SH及SB、SBD系列制动器（液压释放）工作室带有液压站。

The series includes the following types of brakes :

561SE, 560SE, 56SE, 5SE, 450SE, 3SE brake (solenoid release) to be supporting the work of a dedicated power supply .

5SP, 450SP, 4SP, 3SP brake (pressure release) (5bar)

5SH, 450SH, 4SH, 3SH and SB, SBD series brakes (hydraulic released) studio with a hydraulic station .

安全制动器 Safety brake

制动力矩大，维修费用低，带衬垫磨损自动补偿装置（制动力矩稳定），响应时间短。

安装公差大，制动盘端面跳动：最大值±0.2mm。底座相对于制动盘的垂直度偏差：最大值±0.4‰。

Braking torque, and low maintenance costs, with automatic pad wear compensation device (braking torque stability) , the response time is short .

Installation tolerances , brake disc face runout : maximum ± 0.2mm. Base relative to the vertical deviation disc brake : max ± 0.4 ‰.

该系列包含下列类型制动器：

所有SE系列（电磁释放）工作时须配套专用电源。

所有SP系列（气压释放）（5bar）

所有SH系列（液压释放）工作室带有液压站。

The series includes the following types of brakes :

All SE series (electromagnetic release) to be supporting the work of a dedicated power supply .

All SP series (pressure release) (5bar)

All SH Series (hydraulic released) studio with a hydraulic station .

备注：ST1SE、ST2SE仅适合用作安全制动器，当使用频率很低时也可以用作工作制动器。

Note : ST1SE, ST2SE only suitable for use as safety brakes, when the low frequency of use can also be used as a working brake .

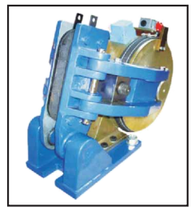

SE系列 Series

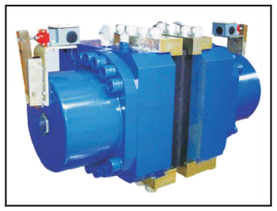

SH系列 Series

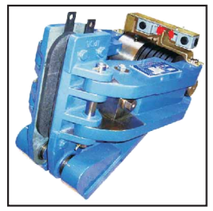

SH系列 Series

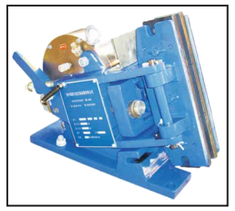

SP系列 Series

ST1SE、ST2SE电磁失效保护制动器

ST1SE、ST2SE ELECTRIC FAIL-SAFE BRAKES

弹簧制动—电力释放—适合盘厚：15mm或30mm

Spring braking–Electric release–Suitable for Disc Thickness of 15mm or 30mm

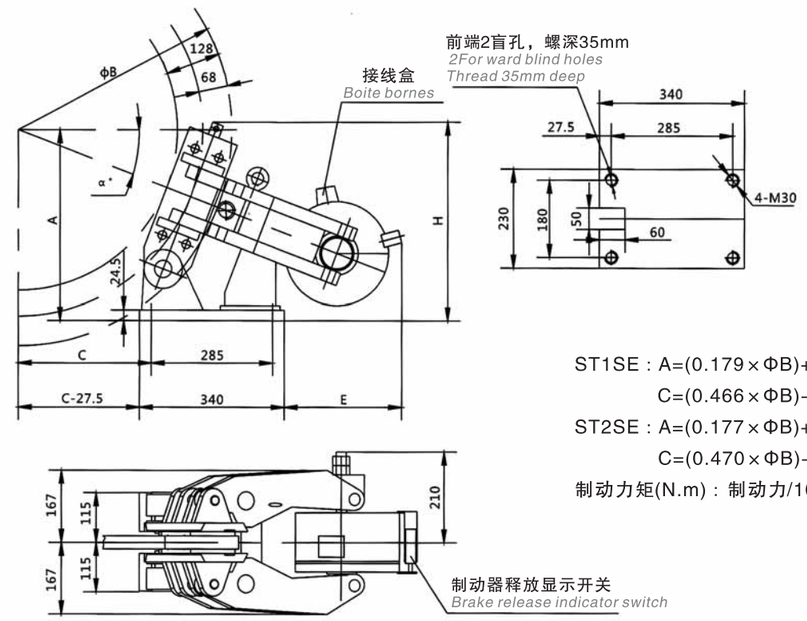

ST1SE：A=(0.179×ΦB)+263 mm

C=(0.466×ΦB)−155 mm

ST2SE：A=(0.177×ΦB)+279 mm

C=(0.470×ΦB)−161 mm

制动力矩(N.m)：制动力/1000×[(ΦB/2)−68]

技术数据 *Technical Data(mm)*

型号 *Type*	ST1SE		ST2SE	
最大制动力 *Maximum braking force(N)*	紧急制动 *Emergency brake*	工作制动 *Brake work*	紧急制动 *Emergency brake*	工作制动 *Brake work*
	35000	25000	70000	50000
启动功率 *Starting power(W)*	1760		2830	
维持功率 *Maintain power(W)*	60		160	
响应时间 *Response time(s)*	0.15		0.2	
重 量 *Weight(kg)*	155		194	

型号 *Type*	E	H	α°
ST1SE	275	460	21°
ST2SE	281	477	20°

备注：产品如有改进，恕不另行通知。 *Note : Products subject to improvement without notice .*

5SE、450SE、4SE、3SE电磁失效保护制动器

5SE、450SE、4SE、3SE ELECTRIC FAIL-SAFE BRAKES

弹簧制动—电力释放—适合盘厚：15或30mm

Spring braking–Electric release–Suitable for Disc Thickness of 15mm or 30mm

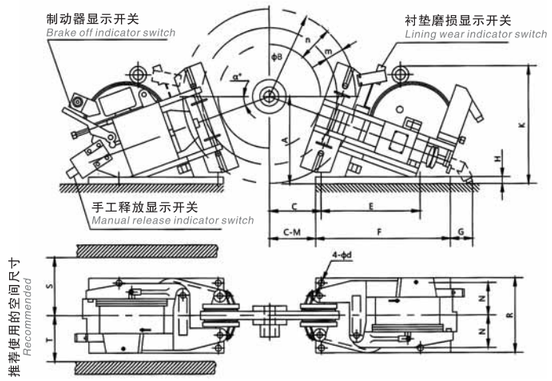

技术数据 *Technical Data(mm)*

	5SE	450SE	4SE	3SE
最大制动力 Maximum braking force(N)	1650	3340	5880	10170
启动功率 Starting power(W)	475	1000	1000	1095
维持功率 Maintain power(W)	14	44	42	58
响应时间 Response time(s)	0.15	0.15	0.2	0.2
重 量 Weight(kg)	34	34	77	120

盘径 Disk Drive ΦB(mm)		315	355	400	450	500	560	630	710	800
5SE	最大制动力矩 Maximum braking torque(N.m)	190	220	260	300	340	390	460		
	A(mm)	159	165	172	179	187	195	206		
	C(mm)	99	119	142	167	192	223	258		
450SE	最大制动力矩 Maximum braking torque(N.m)	380	450	510	600	680	770	900	1030	1180
	A(mm)	159	165	172	179	187	195	206	218	231
	C(mm)	99	119	142	167	192	223	258	298	344
4SE	最大制动力矩 Maximum braking torque(N.m)				950	1120	1270	1500	1750	2000
	A(mm)				225	232	241	251	262	274
	C(mm)				133	157	185	218	256	299
3SE	最大制动力矩 Maximum braking torque(N.m)				1600	1820	2100	2500	2900	3350
	A(mm)				287	295	305	317	331	346
	C(mm)				103	127	155	188	226	269

外形尺寸表 *Dimension Table(mm)*

型号 Type	E	F	G	H	K	M	N	S	T	R	d	m	n	α°
5SE	200	245	155	15	280	15	87.5	175	120	200	15	42	90	13°
450SE	200	245	155	15	280	15	87.5	175	120	200	15	42	90	13°
4SE	260	355	85	20	343	20	117.5	210	165	270	22	57	122	17°
3SE	360	490	80	25	435	20	117.5	210	165	270	22	68	128	20°

备注：产品如有改进，恕不另行通知。 *Note : Products subject to improvement without notice .*

561SE、560SE、56SE电磁失效保护制动器

561SE、560SE、56SE ELECTRIC FAIL-SAFE BRAKES

弹簧制动—电力释放—适合盘厚：15或30mm

Spring braking–Electric release–Suitable for Disc Thickness of 15mm or 30mm

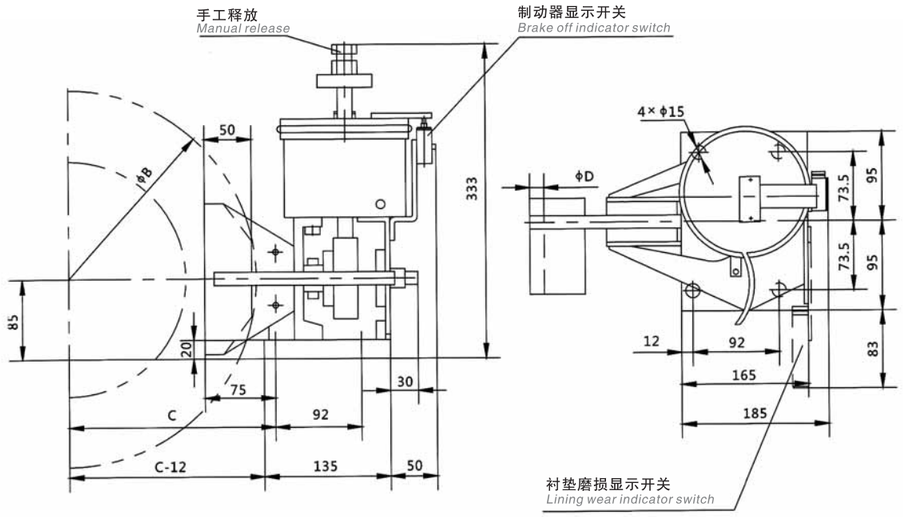

技术数据 *Technical Data(mm)*

型号 Type	561SE	560SE	56SE
最大制动力 Maximum braking force(N)	640	1220	1600
启动功率 Starting power(W)	255	310	895
维持功率 Maintain power(W)	7	8	33
响应时间 Response time(s)	0.15	0.15	0.15
重 量 Weight(kg)	20	20	20

盘径 Disk Drive ΦB(mm)		175	220	250	315	355	440	450	500	560	630
561SE	最大制动力矩 Maximum braking torque(N.m)	40	50	60	80	90	100	120	140	150	180
560SE		80	90	120	150	170	200	230	265	280	340
56SE		110	130	150	190	220	260	300	350	390	440
C(mm)		118	130	145	178	198	220	245	270	300	335

备注：产品如有改进，恕不另行通知。

Note : Products subject to improvement without notice .

盘式制动器 DISC BRAKES

ST10SH、ST16SH、ST25SH、ST40SH液压失效保护制动器

ST10SH、ST16SH、ST25SH、ST40SH HYDRAULIC FAIL-SAFE BRAKES

弹簧制动—液压释放

Spring braking-Hydraulic release

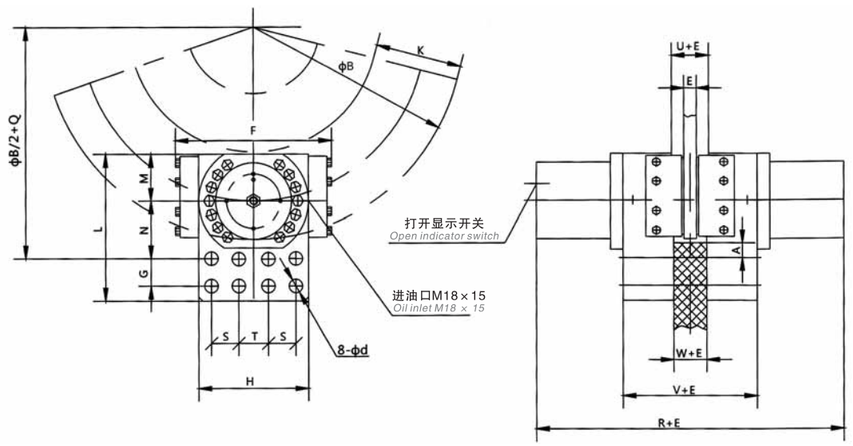

制动力矩公式：

ST10SH：制动力矩(N.m)=制动力/1000×(ΦB/2-75)

ST16SH：制动力矩(N.m)=制动力/1000×(ΦB/2-90)

ST25SH：制动力矩(N.m)=制动力/1000×(ΦB/2-90)

ST40SH：制动力矩(N.m)=制动力/1000×(ΦB/2-100)

连接螺栓：

ST10SH：8个M24螺栓，等级12.9上紧力矩1000N.m

ST16SH：8个M30螺栓，等级12.9上紧力矩1350N.m

ST25SH：8个M30螺栓，等级12.9上紧力矩1500N.m

ST40SH：8个M39螺栓，等级12.9上紧力矩5000N.m

技术数据 *Technical Data(mm)*

	ST10SH	ST16SH	ST25SH	ST40SH
最大制动力 *Maximum braking force(N)*	81000	150000	200000	28000
间 隙 *Gap(mm)*	2	1	1	2
释放压力 *Release of pressure(bar)*	130	150	150	190
响应时间 *Response time(s)*	0.2	0.2	0.2	0.2
重 量 *Weight(kg)*		218	286	

外形尺寸表 *Dimension Table(mm)*

型号 *Type*	S	T	H	d	M	N	G	L	F	K	Q	A	U	W	V	R
ST10SH	45	45	190	25	95	130	55	300	315	190	45	35	88	48	288	648
ST16SH	65	70	260	32	110	135	65	345	370	205	45	35	88	48	288	600
ST25SH	72	90	302	32	130	150	65	380	400	220	60	50	88	48	288	650
ST40SH	100	100	367	41	168	219	100	522	462	268	119	100	90	50	306	630

备注：产品如有改进，恕不另行通知。

Note : Products subject to improvement without notice .

ST1SH、ST2SH、ST3SH液压失效保护制动器

ST1SH、ST2SH、ST3SH HYDRAULIC FAIL-SAFE BRAKES

弹簧制动—液压释放—适合盘厚：15或30mm

Spring braking-Hydraulic release-Suitable for Disc Thickness of 15mm or 30mm

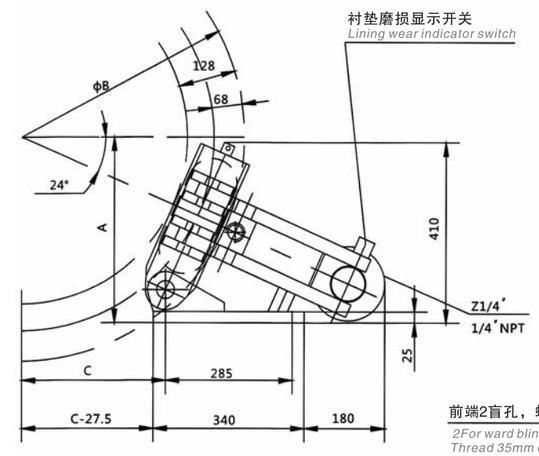

A=(0.203×ΦB)+211 mm

C=(0.456×ΦB)-133 mm

制动力矩(N.m)：制动力/1000X[(Φ)B/2)-68]

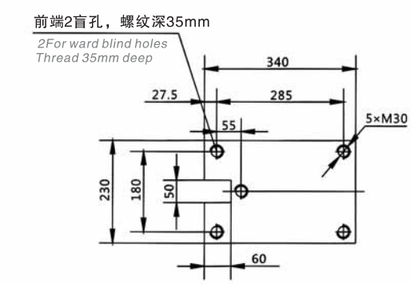

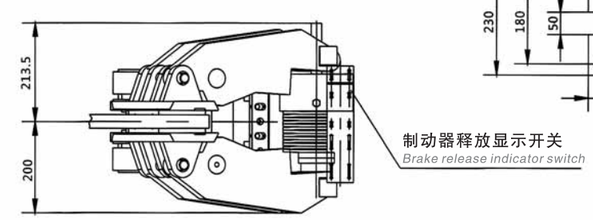

技术数据 *Technical Data(mm)*

型号 *Type*	ST1SH		ST2SH		ST3SH	
最大制动力 *Maximum braking force(N)*	紧急制动 *Emergency brake*	工作制动 *Brake work*	紧急制动 *Emergency brake*	工作制动 *Brake work*	紧急制动 *Emergency brake*	工作制动 *Brake work*
	35000	25000	70000	50000	147000	105000
释放压力 *Release of pressure(bar)*	100		100		100	
响应时间 *Response time(s)*	0.2		0.2		0.2	
重 量 *Weight(kg)*	117		117		118	

备注：产品如有改进，恕不另行通知。

Note : Products subject to improvement without notice .

5SH、450SH、4SH、3SH液压失效保护制动器

5SH、450SH、4SH、3SH HYDRAULIC FAIL-SAFE BRAKES

弹簧制动—液压释放—适合盘厚：15或30mm

Spring braking–Hydraulic release–Suitable for Disc Thickness of 15mm or 30mm

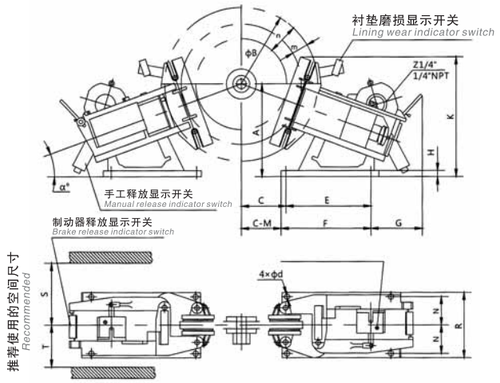

技术数据 *Technical Data(mm)*

	5SH	450SH	4SH	3SH
最大制动力 *Maximum braking force(N)*	1650	3340	5880	10170
释放压力 *Release of pressure(bar)*	100	100	100	100
响应时间 *Response time(s)*	0.15	0.15	0.2	0.2
重 量 *Weight(kg)*	27	28	62	95

盘径 *Disk Drive* ΦB(mm)		315	355	400	450	500	560	630	710	800
5SH	最大制动力矩 *Maximum braking torque(N.m)*	190	220	260	300	340	390	460		
	A(mm)	159	165	172	179	187	195	206		
	C(mm)	99	119	142	167	192	223	258		
450SH	最大制动力矩 *Maximum braking torque(N.m)*	380	450	510	600	680	770	900	1030	1180
	A(mm)	159	165	172	179	187	195	206	218	231
	C(mm)	99	119	142	167	192	223	258	298	344
4SH	最大制动力矩 *Maximum braking torque(N.m)*				950	1120	1270	1500	1750	2000
	A(mm)				225	232	241	251	262	274
	C(mm)				133	157	185	218	256	299
3SH	最大制动力矩 *Maximum braking torque(N.m)*				1600	1820	2100	2500	2900	3350
	A(mm)				287	295	305	317	331	346
	C(mm)				103	127	155	188	226	269

外形尺寸表 *Dimension Table(mm)*

型号 *Type*	E	F	G	H	K	M	N	S	T	R	d	m	n	α°
5SH	200	245	155	15	280	15	87.5	175	120	200	15	42	90	13°
450SH	200	245	155	15	280	15	87.5	175	120	200	15	42	90	13°
4SH	260	355	85	20	343	20	117.5	210	165	270	22	57	122	17°
3SH	360	490	80	25	435	20	117.5	210	165	270	22	68	128	20°

备注：产品如有改进，恕不另行通知。 *Note : Products subject to improvement without notice .*

5SP、450SP、4SP、3SP气动失效保护制动器

5SP、450SP、4SP、3SP PNEUMATIC FAIL-SAFE BRAKES

弹簧制动—气动释放—适合盘厚：15或30mm

Spring braking–Pneumatic release–Suitable for Disc Thickness of 15mm or 30mm

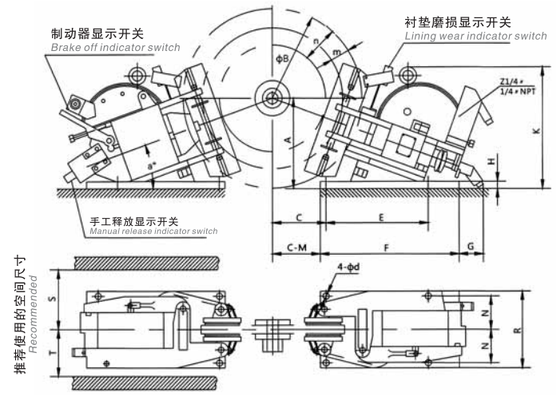

技术数据 *Technical Data(mm)*

	5SP	450SP	4SP	3SP
最大制动力 *Maximum braking force(N)*	1650	3340	5880	10170
释放压力 *Release of pressure(bar)*	5	5	5	5
响应时间 *Response time(s)*	0.15	0.15	77	0.2
重 量 *Weight(kg)*	34	34	62	122

盘径 *Disk Drive* ΦB(mm)		315	355	400	450	500	560	630	710	800
5SP	最大制动力矩 *Maximum braking torque(N.m)*	190	220	260	300	340	390	460		
	A(mm)	159	165	172	179	187	195	206		
	C(mm)	99	119	142	167	192	223	258		
450SP	最大制动力矩 *Maximum braking torque(N.m)*	380	450	510	600	680	770	900	1030	1180
	A(mm)	159	165	172	179	187	195	206	218	231
	C(mm)	99	119	142	167	192	223	258	298	344
4SP	最大制动力矩 *Maximum braking torque(N.m)*				950	1120	1270	1500	1750	2000
	A(mm)				225	232	241	251	262	274
	C(mm)				133	157	185	218	256	299
3SP	最大制动力矩 *Maximum braking torque(N.m)*				1600	1820	2100	2500	2900	3350
	A(mm)				287	295	305	317	331	346
	C(mm)				103	127	155	188	226	269

外形尺寸表 *Dimension Table(mm)*

型号 *Type*	E	F	G	H	K	M	N	S	T	R	d	m	n	α°
5SP	200	245	155	15	280	15	87.5	175	120	200	15	42	90	13°
450SP	200	245	155	15	280	15	87.5	175	120	200	15	42	90	13°
4SP	260	355	85	20	343	20	117.5	210	165	270	22	57	122	17°
3SP	360	490	80	25	435	20	117.5	210	165	270	22	68	128	20°

备注：产品如有改进，恕不另行通知。 *Note : Products subject to improvement without notice .*

ADP系列气动直动制动器

ADP series of direct-acting pneumatic brake

主要特点

Main Design Features

- ■利用压力控制装置调整和控制相应的压力产生制动；
- ■制动器可安装一个衬垫磨损自动调节装置和一个衬垫复位系统；
- ■制动器可装配一个特殊设备“GA”来消除因非常低速时产生的振动。

■Using the pressure control device to adjust and control the corresponding stress and braking;
■A brake pad wear can be installed automatically adjust the device and a pad to reset the system ;
■Brakes can be equipped with a special device "GA" to eliminate the very low speed vibration .

ADP60M、ADP61M、ADP62M外形

Outline of the ADP60M、ADP61M、ADP62M

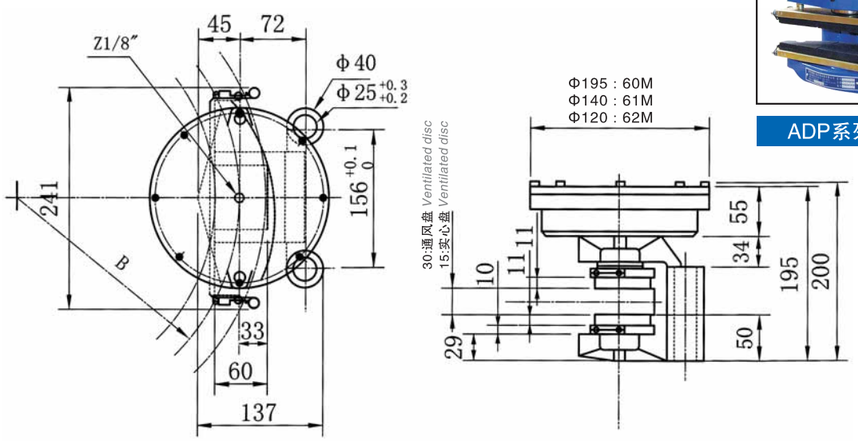

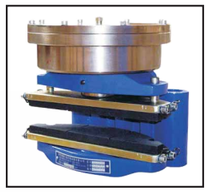

ADP系列 Series

ADP60M、ADP61M、ADP62M基本参数 *ADP60M, ADP61M, ADP62M basic parameters*

制动器型号 *Brake type*	ADP60M	ADP61M	ADP62M
压力 *Pressure(bar)*	7.5	15	15
制动力 *Braking force(N)*	F=P × 990	F=P × 424	F=P × 265
重 量 *Weight(kg)*	12	11	10

制动力矩(N.m)=制动力/1000 × B(B为摩擦半径，单位：mm)
对于“B”尺寸和安装数据，请看ADP60M-ADP61M-ADP62M总装图
Braking torque (Nm) = braking force/1000 × B (B is the friction radius , unit: mm)
For the "B" dimensions and installation data , see ADP60M-ADP61M-ADP62M assembly diagram

*P=可得到的压力(bar) ** P = available pressure (bar)*

注：具体型号、结构外形的尺寸保留更改的权利。
Note:Our company reserves the rights to change the actual type and overall dimensions of the structure.

盘式制动器 DISC BRAKES

底板与盘平行时的装配形式

Parallel with the floor plate assembly in the form

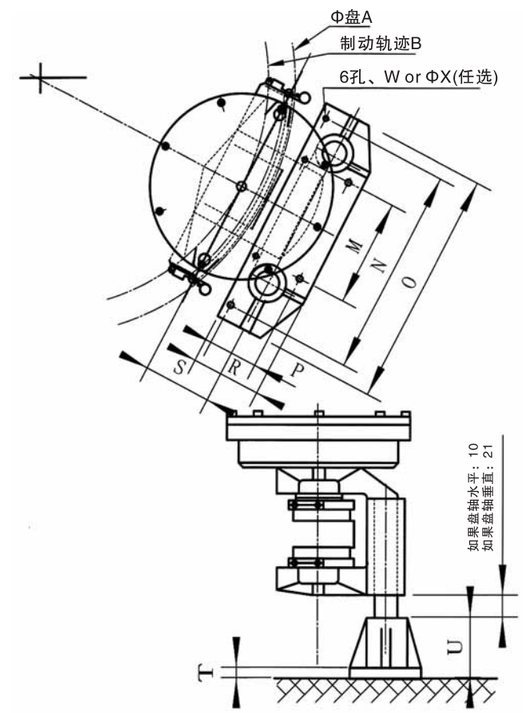

托架与盘垂直时的装配形式

Bracket assembly with the plate perpendicular to the form

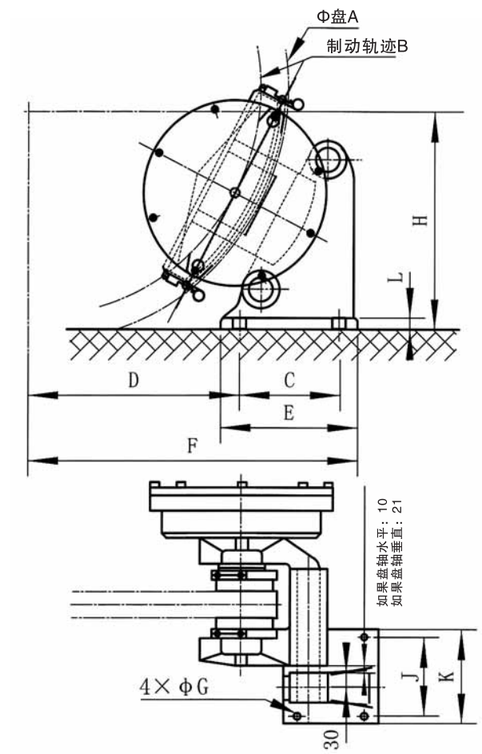

对非标准盘，请向技术部咨 *For non-standard disk, the Technology Advisory*

制动器型号 *Brake type*	A	B	C	D	E	F	G	H	J	K	L	M	N	O	P	R	S	T	U	W	X
ADP60M	315	117	90	135	130	245	12	160	110	140	10	120	210	240	50	80	72	10	65	8	9
ADP61M	355	138	90	145	135	260	12	180	110	140	10	120	210	240	50	80	72	10	65	8	9
ADP62M	395	156	105	150	145	275	12	200	110	140	10	120	210	240	50	80	72	10	65	8	9
	445	183	115	160	155	295	12	225	110	140	10	120	210	240	50	80	72	10	65	8	9

注：具体型号、结构外形的尺寸保留更改的权利。
Note:Our company reserves the rights to change the actual type and overall dimensions of the structure.

盘式制动器 DISC BRAKES

防风制动器 STORM BRAKES

应用: 港口及大型铁路货场所用的起重机械设备大部分安装在空旷、风力极大的场所，会受到突发的阵风和台风的袭击。多起起重大事故造成了巨大的损失，引起了相关行业的高度重视，采取了一些防风安全措施。

Application:

Large cargo port and railway premises to use most of the lifting machinery and equipment installed in the open , the wind a great place , will be subject to sudden gusts and typhoons . More than serious accidents caused huge losses , caused a high degree of importance related industries , has taken some wind and security measures.

一、YW-E系列两步式电力液压鼓式制动器。在大车行走机构上使用两级制动器，刚开始产生较小的制动力矩，一段时间后产生较大力矩，其制动效果、配件成本类似于加大大车行走机构制动力矩。(请见23页)

YW-E series of two–step electro–hydraulic drum brakes . Travel agencies in the cart to use two brakes, just started to have less braking torque , a period of time have a greater torque , the braking effect , the cost of accessories like travel agencies to increase the braking torque carts .(See page 23)

二、YFX系列电力液压防风铁楔制动器
YFX series electro-hydraulic brake wind iron wedge

YFX系列 *series*

三、YJDQ系列液压夹轨器
YJGQ series hydraulic rail clip device

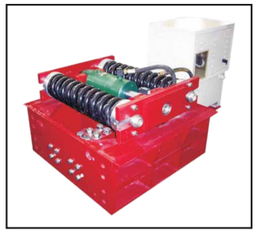

YJGQ系列 *series*

四、YDGZ系列液压顶轨制动器 *YDGZ series hydraulic top rail brakes*

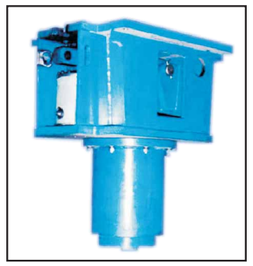

YDGZ系列 *series*

YDGZ系列 *series*

YFX系列防风铁楔制动器

YFX series wind iron wedge brakes

应用：YFX电力防风铁楔制动器主要作为港口、码头、铁路等露天工作的龙门起重机、门座起重机、装卸桥等各种有轨起重机在工作状态下的防风制动。同时也可与锚定装置、防风拉索等共同作用，用于起重机非工作状态下的安全防风制动措施。

Application:

YFX series electro hydraufic wind proof gate wedge brakes are mainly used in pods, docks, railways etc. for various traveling cranes operating in the open air under operating conditions such as gantry cranes, jib cranes and unloaders etc. for wind proof brakillg.. Meanwhile they are also available to be applied with the anchoring devices and wind proof ropes for emergency and wind proof braking when the cranes are under non opetating conditions.

主要特点

Main Design Features

- ■设有释放限位开关，可进行联锁保护。
- ■主要摆动铰点均设有自润滑轴承，传动效率高，动作灵敏可靠，且寿命长。
- ■具有手动释放功距维护方便。
- ■匹配Ed复位弹簧推动器，动作，动作性能优良，密封性能好，外壳防护等级高；且具有弹簧复位功能避免断电后推动器动作不灵敏楔块不能及时复位。
- ■楔块经特殊工艺处理，磨擦系数高，防腐性能好。

- ■*With limited switch and interlocking protection function.*
- ■*All hinge points are fitted with self-lubrication bearings with high transmission efftclency agile movement and long service life.*
- ■*With manual release function and easy to maletain.*
- ■*It adopts Ed thruster as actuator that has excellent performance, reliable sealing and encloser with high-class protection function, and with spring resetting function avoiding the following situation. the wedge can't reset in time because the thruster's un-agile after power went off.*
- ■*The wedge is treated with special technique. It has high friction coefficient and excellent anti-corrosion performance.*

YFX系列 *series*

订货标记

Order Mark

YFX □ □ □

- 手动释放装置(S1:左侧布置, S2:右侧布置) *The position of manual release (S1: left lay , S2: right lay)*
- 推动器额定推力 *Rated thrust force of thruster*
- 车轮轮径 *Wheel diameter*
- 产品型号 *Type*

K1:上升显示行程开关 *Lifting display limit switch*

订货示例

Order Example

YFX-630/80 S1　YFX-500/80 S2.K1 440V 60Hz

注：若电源为38V 50Hz订货时可不注明，否则请注明电源电压及频事。

Notes: If power source is 380V 50Hz, it is unnecessaly to specify in order, if not, please specify voltage and frequency.

外形及安装尺寸 Outline and installation dimension

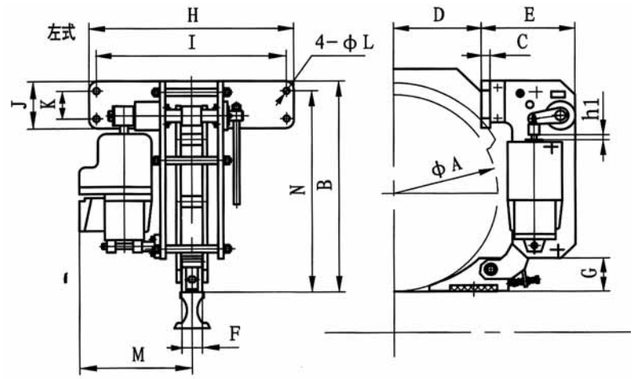

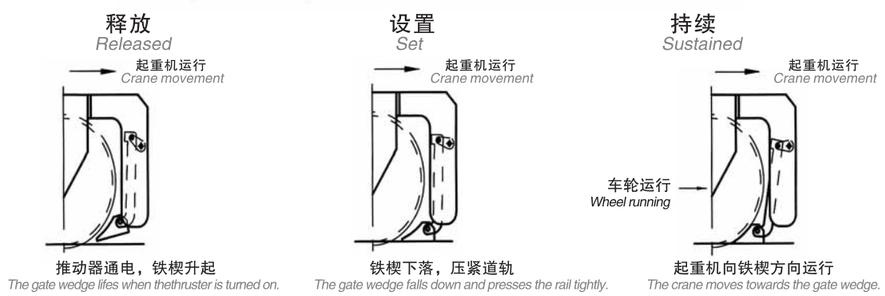

YFX系列防风铁楔制动器技术参数及外形尺寸 *Technical data and dimensions*

单位：(mm)

制动器型号 Brake type	A	B	C	D	E	F	G	H	I	J	K	L	M	N	h1	重量 Weight (kg)	推动器型号 Thruster type
YFX-350/80	350	640	20	180	310	60	55	520	460	165	100	18	360	607	8	129	Ed80/6C Ed80/6SC
YFX-500/80	500	640	20	240	310	60	55	480	430	165	100	18	360	605	8	129	
YFX-550/80	550	640	20	240	310	60	55	480	430	165	100	18	360	605	8	129	
YFX-600/80	600	760	25	260	315	60	120	650	600	170	100	22	360	725	8	146	
YFX-630/80	630	760	25	260	315	60	120	650	600	170	100	22	360	725	8	146	
YFX-700/80	700	760	25	300	315	70	120	700	650	170	100	22	360	725	8	146	
YFX-710/80	710	760	25	300	315	70	120	700	650	170	100	22	360	725	8	149	
YFX-800/80	800	950	25	300	355	70	120	700	650	170	100	22	395	915	8	164	

注:1. 电力液压推动器接线盒可旋转90度安装，并可根据用户需要决定安装在何侧。
2. 电力液压推动器可根据用户要求换为带下降延时推动器。
3. 电力液压防风铁楔制动器分为左式和右式：从上图的主视图看，推动器在左边为左式，在右边为右式。
4. 由于规格不同，具体结构可能与上图有差异。
5. 具体型号，结构外形尺寸保留更改的权利。

Notes:1.Electro-hydraulic thruster wiring box can be installed turning 90 degree, and also can be installed in specified position according to customer's requirement.
2.Electro-hydraufic thruster can be changed as down-delay thruster according to customer's requirement.
3.The electro hydraulic wind proof gate brakes are divided into/eft hand and right. Form the main view in the above mentioned figure;when the thruster is on the left it is called as/eft hand; when the thruster is on the right it is ca#ed as right hand.
4.The actual structure may vary from the above figure because of different sizes.
5.Our company reserves the rights to change the actual type and overall dimensions of the structure.

YLBZ系列液压轮边制动器

YLBZ series hydraulic wheel brakes

应用：YLBZ液压轮边制动器主要作为港口、码头等露天使用的大中型起重机及港口装卸机械工作状态下得放风制动和非工作状态下得辅助防风制动。轮边制动器一般只用于被动车轮上，并进行直接制动，可有效防止被制动的车轮在风力作用下产生滚动移位。如在驱动轮高速轴上同时采用防风制动器，效果会更好且比较经济。

Application:

YLBZ main hydraulic wheel brakes as ports, docks and other open-air use of cranes and port handling machinery and medium-sized state was leaked brake work and non- working state was wind assisted braking . Wheel brake on the wheel is generally used for passive and direct braking , which can effectively prevent brake wheels rolling under the action of the wind shift . If the wheel shaft while using wind speed brakes , the effect will be better and more economical .

主要特点 Main Design Features

- 常闭式设计，液压站驱动施力于碟形弹簧而释放，安全可靠；
- 设置限位开关，进行联锁保护。
- 无石棉摩擦片性能稳定，安装结构形式新颖独特，更换方便；
- 防腐型设计，全部紧固件和销轴为不锈钢制造。

- *Normally closed design, the hydraulic drive force on the disc spring and released , safe and reliable ;*
- *Set the limit switch , the interlock protection .*
- *Stable non-asbestos friction plate , install new and unique structure , easy to replace ;*
- *Anti-corrosion design , all stainless steel fasteners and pin manufacturing.*

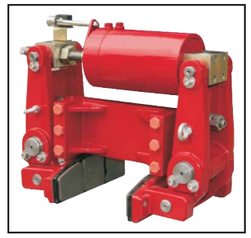

YLBZ系列 *series*

使用条件 Operating conditions

- 环境温度：-5℃~+40℃
- 工作压力：8MPa
- 户外雨雪侵蚀或有腐蚀性气体和介质应采用防腐型产品。

- *Ambient temperature:0℃~+40℃*
- *Relative humidity:8MPa*
- *Outdoor rain erosion or corrosive gas and medium corrosion products should be used.*

订货标记 Order Mark

YLBZ □-□-□
- 特殊要求(可用文字说明) *Special requirement (can be specified in words)*
- 车轮宽度 *Wheel width*
- 车轮轮压 *Wheel pressure (10KN)*
- 系列代号 *Series Code*

例：如额定夹紧力为50KN，轮宽160，左式装配，其订货标记为YLBZ25-160-左；右式装配为YLBZ25-160-右。

Example : If the nominal clamping force of 50KN, wheel width 160 , the left -type assembly , the order is marked as YLBZ25-160- left ; right-hand assembly of YLBZ25-160- right.

外形及安装尺寸 Outline and installation dimension

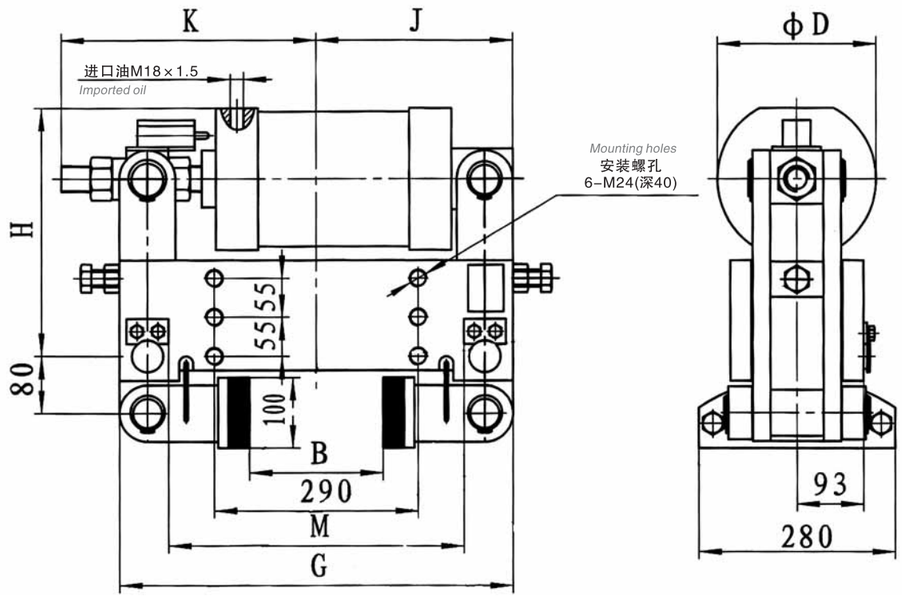

(图示为右式，与此对称为左式) *(Shown as the right-hand side , with this type of known left)*

YLBZ系列液压轮边制动器技术参数及外形尺寸 *Technical data and dimensions* 单位：(mm)

制动器型号 Brake type	额定夹紧力 Nominal clamping force	额定制动力 Amount of custom power	安装及外形尺寸 Dimensions (mm)							重量 Weight (kg)
			B	K	J	H	D	G	M	
YLBZ25-160	50	42	160	300	250	310	190	500	370	145
YLBZ40-150	73	63	150			325				150
YLBZ40-160			160							
YLBZ40-180			180							
YLBZ40-200			200							
YLBZ63-180	114	96	180				200	510	370	155
YLBZ63-200			200							
YLBZ63-210			210							
YLBZ100-200	180	150	200	360	280	350	225	560	420	160

注：具体型号、结构外形的尺寸保留更改的权利。
Note:Our company reserves the rights to change the actual type and overall dimensions of the structure.

YJGQ系列液压夹轨器

YJGQ series hydraulic rail clip device

应用： YJGQ型液压夹轨器主要用于各种桥式、门式集装箱起重机等轨道式机械工作状态或非工作状态下得防风和抵御其他外来的冲击力。

Application:

YJGQ hydraulic folder is mainly used for a variety of bridge rail , rail gantry container cranes and other mechanical work or work under the state was to resist wind and other external impact.

主要特点

Main Design Features

- 常闭设计、弹簧力夹紧，液压缸驱动释放；
- 防腐型设计；
- 设有限位开关，可与起重机行走机构进行连锁保护；
- 钳体为可浮动式结构：水平浮动距离±20mm,垂直浮动距离±10mm;
- 主机与液压站一般采用整体结构（如需要主机可与液压站分离，请订货时说明）

- *Normally closed design , the spring force clamping , hydraulic cylinder drive release;*
- *Anti-corrosion design ;*
- *Has a limit switch , crane travel agencies with chain protection;*
- *Clamp body to be floating structure : the level of floating distance ± 20mm, floating vertical distance ± 10mm;*
- *Host and the overall structure of commonly used hydraulic station (if required with hydraulic separation of the host , please note when ordering)*

使用条件

Operating conditions

- 环境温度：0℃~+40℃
- 液压站驱动电源：一般用干三相AC380V、50Hz（如需其它电压，请订货时事先说明）。
- 液压站控制电源：AC220V、50Hz
- 限位开关电源：AC125V~250V。
- 适用的工作方式：间断式，短时作用、较低频率。

- *Ambient temperature : 0 ℃ ~ +40 ℃*
- *Hydraulic drive power : generally with a dry three-phase AC380V, 50Hz (for other voltages , please note when ordering in advance) .*
- *Hydraulic control power : AC220V, 50Hz*
- *Limit switching power supply : AC125V ~ 250V.*
- *Applicable to work: intermittent , short-term effect , a lower frequency.*

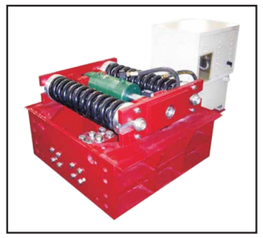

YJGQ系列 *series*

订货标记

Order Mark

YJGQ – □ – □ – □

- 系列代号 *Series Code*
- 夹紧力代号 *Clamping force code*
- 轨道代号 如Q10、Q12等（Q10-表示Qu100、Q12-表示Qu120） *Track code such as the Q10, Q12 , etc. (Q10- that Qu100, Q12- that Qu120)*
- 附加功能代号 如：K1（开闸限位开关）等 *Additional features such as code : K1 (gate limit switches) , etc.*

外形及安装尺寸 Outline and installation dimension

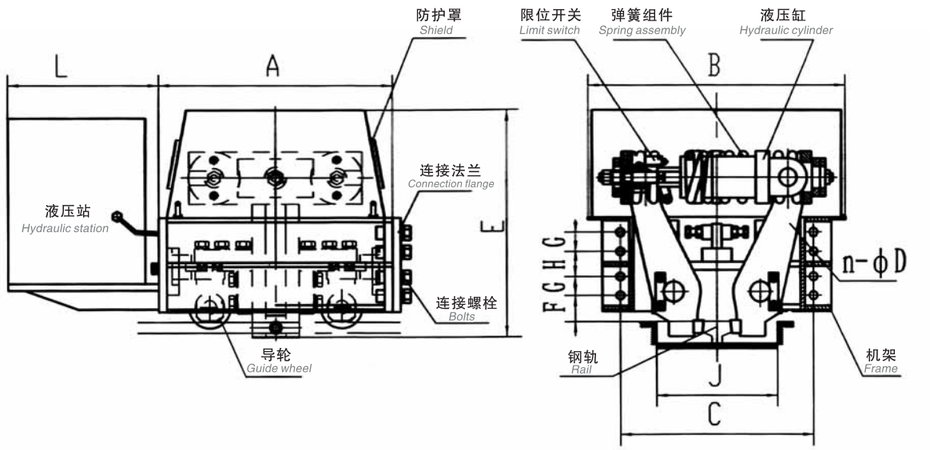

YJGQ系列液压轮边制动器技术参数及外形尺寸 *Technical data and dimensions*

单位：(mm)

制动器型号 *Brake type*	夹紧力 *Clamping force (KN)*	A	B	C	N-ΦD	E	F	G	H	J	L
YJGQ-16	160	820	870	630	6-Φ26	790	110	80	80	>310	650
YJGQ-20	200	820	870	630	6-Φ26	790	110	80	80	>310	650
YJGQ-25	250	930	890	720	8-Φ30	835	97	70	93	>380	650
YJGQ-31	315	930	890	720	8-Φ30	835	97	70	93	>380	650
YJGQ-40	400	1100	1100	830	8-Φ33	1050	125	100	100	>410	–705
YJGQ-60	600	1250	1250	830	8-Φ40	1100	125	100	100	>430	–705

注：结构外形尺寸保留更改的权利。
夹轨器防滑力=2x夹紧力xμ (摩檫系数，μ一般取0.25)

Note : Structural Dimensions reserves the right to change .
Clip rail system Anti force = 2x clamping force x μ (Friction coefficient , μ 0.25 general admission)

夹轨器与钢轨液压站配套表 *Clip rail and rail hydraulic device supporting table*

夹紧器型号 *Clamp model*	YJGQ-16	YJGQ-20	YJGQ-25	YJGQ-31	YJGQ-40	YJGQ-60
钢轨型号 Rail model	Qu100、Qu80、Qu70、P50		Qu80、Qu100、Qu120			Qu120
匹配液压站 *Match the hydraulic station*	YZ(J)-13-4	YZ(J)-10-6	YZ(J)-13-6	YZ(J)-14-9	YZ(J)-14-9	YZ(J)-15-10

液压站液控图 *Hydraulic fluid control chart*

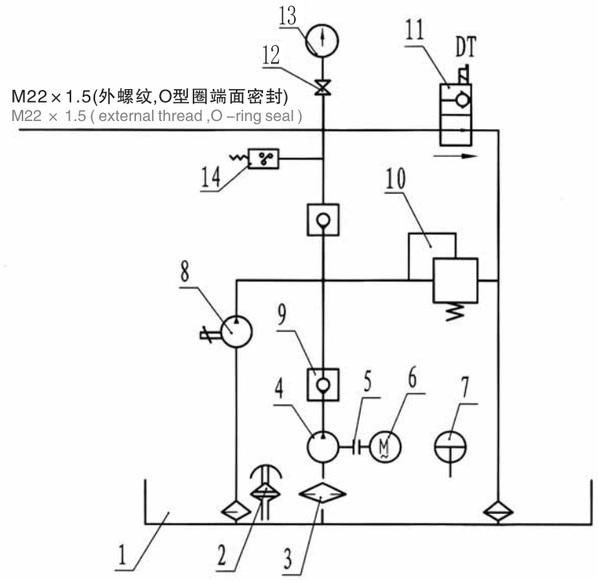

序号 No.	名 称 Name
14	压力继电器 Pressure relay
13	压力表 Pressure gauge
12	压力表开关 Pressure gauge switch
11	电磁换向阀 Solenoid valve
10	溢流阀 Relief valve
9	单向阀 One–way valve
8	手动泵 Hand pump
7	液体计 Liquid meter
6	电动机 Electric motor
5	连轴器 Coupling
4	油泵 Pump
3	吸油口滤油器 Suction filter
2	空气滤油器 Air filter
1	油箱 Tank

液压站电控图 *Hydraulic electronic control chart*

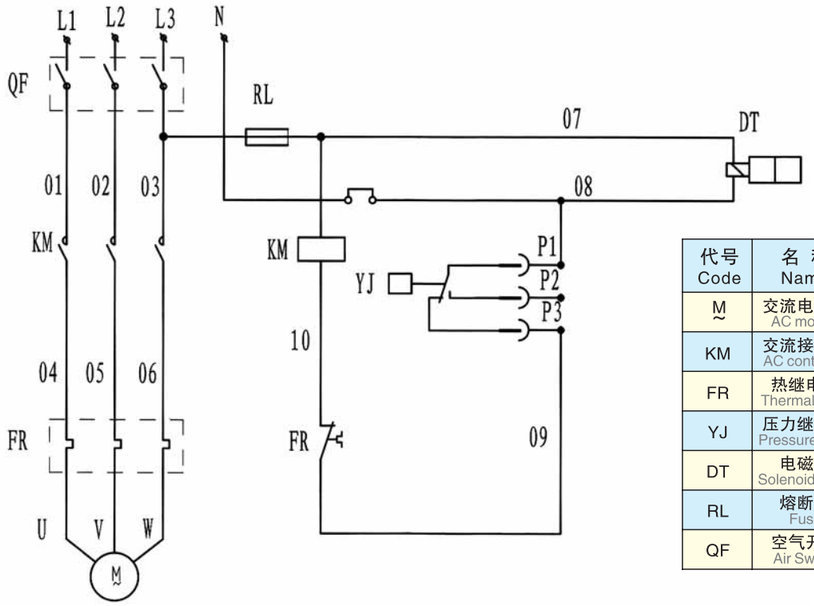

代号 Code	名 称 Name
M	交流电动机 AC motors
KM	交流接触器 AC contactor
FR	热继电器 Thermal relay
YJ	压力继电器 Pressure relay
DT	电磁阀 Solenoid valve
RL	熔断器 Fuse
QF	空气开关 Air Switch

YDGZ系列杠杆式液压顶轨制动器

YDGZ series hydraulic top rail brake lever

应用：YDGZ系列液压顶轨制动器主要用于轨道式大中型起重机及港口、码头等装卸机械工作和非工作状态的防风制动,机械锁定等作用.

主要特点

Main Design Features

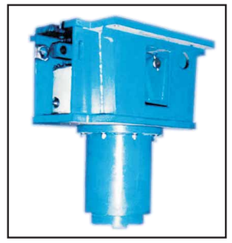

YDGZ系列 series

- 常闭式设计、采用液压站集中驱动控制以特制碟形弹簧实现顶轨制动；
- 摩擦块采用先进的高耐磨钢，性能可靠；
- 设有限位开关，显示工作状态；
- 带手动释放，安装维护方便。

- *Normally closed design, the use of hydraulic drive control with a special focus on achieving the top rail brake disc springs;*
- *Block the use of advanced high-friction wear-resistant steel, reliable performance;*
- *Has a limit switch, display work state;*
- *With manual release, installation and maintenance.*

使用条件

Operating conditions

- 环境温度：0℃~+40℃
- 相对湿度：≤90%
- 周围工作环境中不得有易燃、易爆及腐蚀气体。
- 使用地点的海拔高度符合GB755-2000。

- *Ambient temperature:0℃~+40℃*
- *Relative humidity:≤90%*
- *The surrounding work environment may not flammable , explosive and corrosive gases.*
- *Altitude locations comply with GB755-2000.*

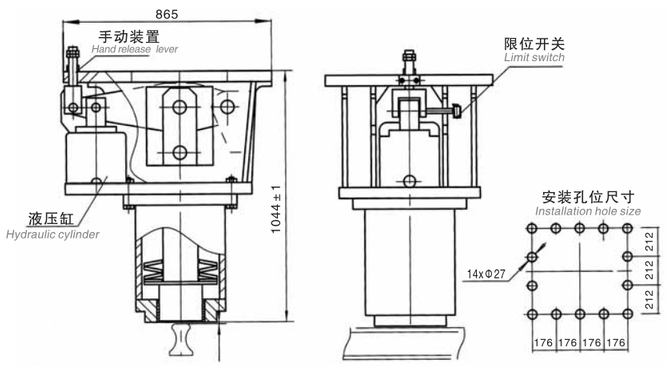

YDGZ系列(杠杆式)液压顶轨制动器技术参数及外形尺寸

Technical data and dimensions of YDGZ series (leveraged) top rail brake hydraulic.

单位：(mm)

制动器型号 *Brake type*	额定顶轨力 Rated power of the top rail (KN)	油缸工作压力 Working pressure cylinder (MPa)	顶杆行程 *Ejector stroke (mm)*	重量 Weight (kg)
YDGZ-40	400	8	16	1110

YDGZ系列
直动式液压顶轨制动器

YDGZ series of top -rail direct-acting hydraulic brake

安装及外形尺寸

Outline and installation dimensions

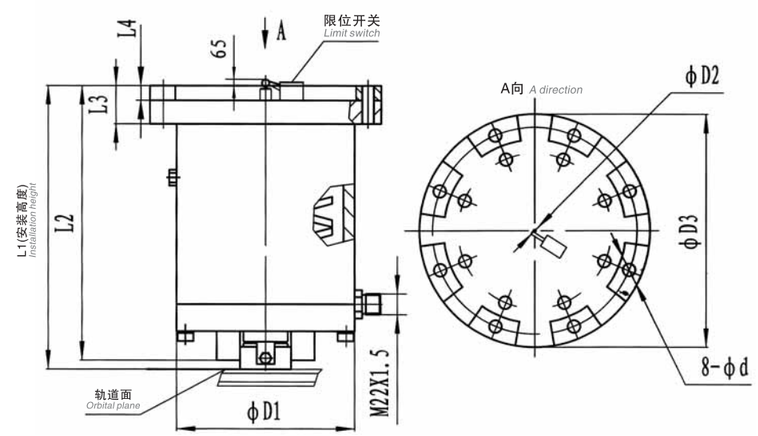

YDGZ系列 series

YDGZ系列直动式液压顶轨制动器技术参数及外形尺寸

Technical data and dimensions of YDGZ series of top -rail direct-acting hydraulic brake.

单位：(mm)

制动器型号 *Brake type*	额定顶轨力 Rated power of the top rail (KN)	额定静摩擦阻力 Static friction (KN)	油缸工作压力 Working pressure cylinder (MPa)	开闸油量 Gate oil (L)	有效行程 Effective stroke	安装高度 Installation height	L2	L3	L4	D1	D2	D3	d	重量 Weight (kg)
YDGZ-20	196	88	5	1	16	506	491	69	25	335	375	425	22	350
YDGZ-35	343	154	7	1.4		625	610	85	33	400	455	520	27	460
YDGZ-45	441	198	10	1.4										480
YDGZ-50	500	225	11	1.4		626	611	85	34	400	455	520	27	500

订货标记

Order Mark

YDGZ - □ □

- 特殊要求(可用文字说明) *Special requirement (can be specified in words)*
- 额定顶轨力代号 *Rated power of the top rail code*
- 系列代号 *Series Code*